Conquest

Argo 8x8

2019
ACCESSORIES MANUAL

Conquest Pro 800 XT
Conquest Pro 800 XT-X
Conquest Pro 800 XT-L
Conquest Pro 1050 XT-D
Conquest 800 Outfitter

Ontario Drive & Gear Limited
www.argoxtv.com
Manual No. 8X8CONQ-Acc-2019
2018/11/09
Printed in Canada

Foreword

ODG has prepared this accessories manual for the Conquest models to assist Argo retailers, qualified mechanics and vehicle owners in selecting the correct quality replacement parts for Argo accessories or for choosing new accessories. For the most current accessories manual visit our website at www.argoxtv.com .

Proper and regular service, and replacing old, worn or broken parts with the correct ARGO replacement parts, are both essential to prolonging the life of the ARGO. Please refer to this accessories manual and/or the accompanying parts manual at our website www.argoxtv.com before ordering any replacement part.

All information contained in this Conquest Accessories Manual is based on the latest product specification available at time of printing. If your Conquest differs from the specifications contained in this manual, check our website www.argoxtv.com for the most current information.

ODG reserves the right to alter specifications on the Conquest models at any time, without obligation or prior notification.

Reproduction of this Conquest Accessories Manual, in whole or in part, is prohibited without prior written permission from Ontario Drive & Gear Limited.

Vehicle Identification

Conquest - 2019 Serial Nos. beginning at ...42665 (last 5 digits of V.I.N.)

Explanation of Manual Format

Ref - Reference number between assembly diagram and component parts list

Part No. - Argo replacement part number for identification and re-ordering

Description - Part description for identification and re-ordering

Qty - Indicates the quantity of a part used in an assembly

Conquest

Using the Accessories Manual

1. Find the major vehicle assembly in the INDEX page, and go to that section.

2. Locate the part in the illustration that you wish to order.

3. Refer to the parts list in that section.

4. Find the correct part number (Part No.), part description (Description) and correct quantity (Qty).

5. Use *only* this information to order ARGO replacement parts. *DO NOT* attempt to order a replacement part by reference number or page number.

Table of Contents

Foreword i
Vehicle Identification..... i
Using the Accessories Manual ii
Conquest Vehicle Accessory Matrix.....iii
INDEX.....iv
Accessories.....Pages 7 - 52

Conquest Vehicle Accessory Matrix

MODEL / ACCESSORY	Conquest Pro 800 XT	Conquest Pro 800 XTi	Conquest Pro 800 XT-X	Conquest Pro 800 XT-L	Conquest Pro 1050 XT-D	Conquest 800 Outfitter
Alternator	Yes	Yes	Yes	Yes	Yes	Yes
Bilge Pump	Yes	Yes	Yes	Yes	Yes	Yes
Brushguard	Yes		Yes	Yes	Yes	Yes
Build Package				XT-L		Outfitter
Capstan Winch				Yes		
Chain Lubrication	Yes		Yes	Yes	Yes	Yes
HD Drive Belt	Yes	Yes	Yes	Yes	Yes	Yes
Dump Box			Yes			
Engine	30 HP	30 HP	30 HP	30 HP	24 HP Diesel	30 HP
Entry Step						Rear
Front Cargo Racks						Yes
Gun Rack						
Headlights	Standard	Standard	Standard	LED-Golight	Standard	LED Hi & Low
Heater						
Mesh - ROPS				Yes		
Rear Rack w/Toolbox & Tote				Yes		
Reciever Winch						
Roof - Hard Top			Yes	Yes		
ROPS			2-Person	2-Person		
Seats	Standard	Standard	Standard	Standard	Standard	Deluxe
Skid Plate	Yes	Yes	Yes	Yes	Yes	Yes
Spot Light						
Stretcher				Yes		
Strobe Light						
Tires	25 Offset Stl Rim	25 Offset Stl Rim	25 Offset Stl Rim	25 Offset Stl Rim	25 Offset Stl Rim	25 Offset Stl Rim
Transmission	Std Admiral	Std Admiral	Std Admiral	Std Admiral	Std Admiral	Std Admiral
Vice				Yes		
Winch - Front	Yes	Yes	Yes	Yes	Yes	Yes
Windshield			Yes	Yes		
Wiper Kit			Yes	Yes		
Horn / BU Alarm	Yes	Yes	Yes	Yes	Yes	Yes
Whelan ROPS Mount Acc.			Yes	Yes		

INDEX

4 Wheel Amphibious Trailer
8 Wheel Amphibious Trailer
622-135 Rear Receiver Winch Bracket
622-145 Winch
835-300 XT Dump Box
850-99 Back-up Alarm
850-228 Auto Lube System
850-292 Whelen ROPS Mount Acc.
956-15 (2) Person ROPS
956-16 (4) Person ROPS
958-71 Bilge Pump Assembly
958-75 Rear Tire Carrier
958-80 Fuel Carrier
958-85 Track Extension Kit - HD
958-88 HD Track Assembly
958-89 Hood Fan
958-90 Windshield
958-93 Cat Walk Mudflap
958-95 XT Light Bar
958-99 Intake Debris Screen
958-102 Front Hard Roof
958-104 Rear Hard Roof
958-110 Two Person Canvas Enclosure
958-112 XT Flat Bed
958-115 Four Person Canvas Enclosure
958-129 Heater Kit - XTI
958-130 Windshield Wiper/Washer
958-147 Brake/Tail Lights
958-156 Heater Assembly-XT Diesel
958-157 Brake Cooling Accessory
958-165 Brushguard XT
958-168 XT Utility Box
958-171 Convertible Top - 4 Person
958-172 Convertible Top Conversion
958-191 Convertible Top - 2 Person
958-192 Folding Windshield
958-200 Emergency Shut Off
958-205 Two Person Canvas Enclosure
958-216 Four Person Enclosure
958-222 Hood Rack
958-235 Gun Rack
958-305 Convertible Top, Brn-Outfitter
958-338 Convertible Top, Blk-Outfitter
959-01 Universal Mount
10636C Acc, Trailer Cover-8x8

This page left intentially blank

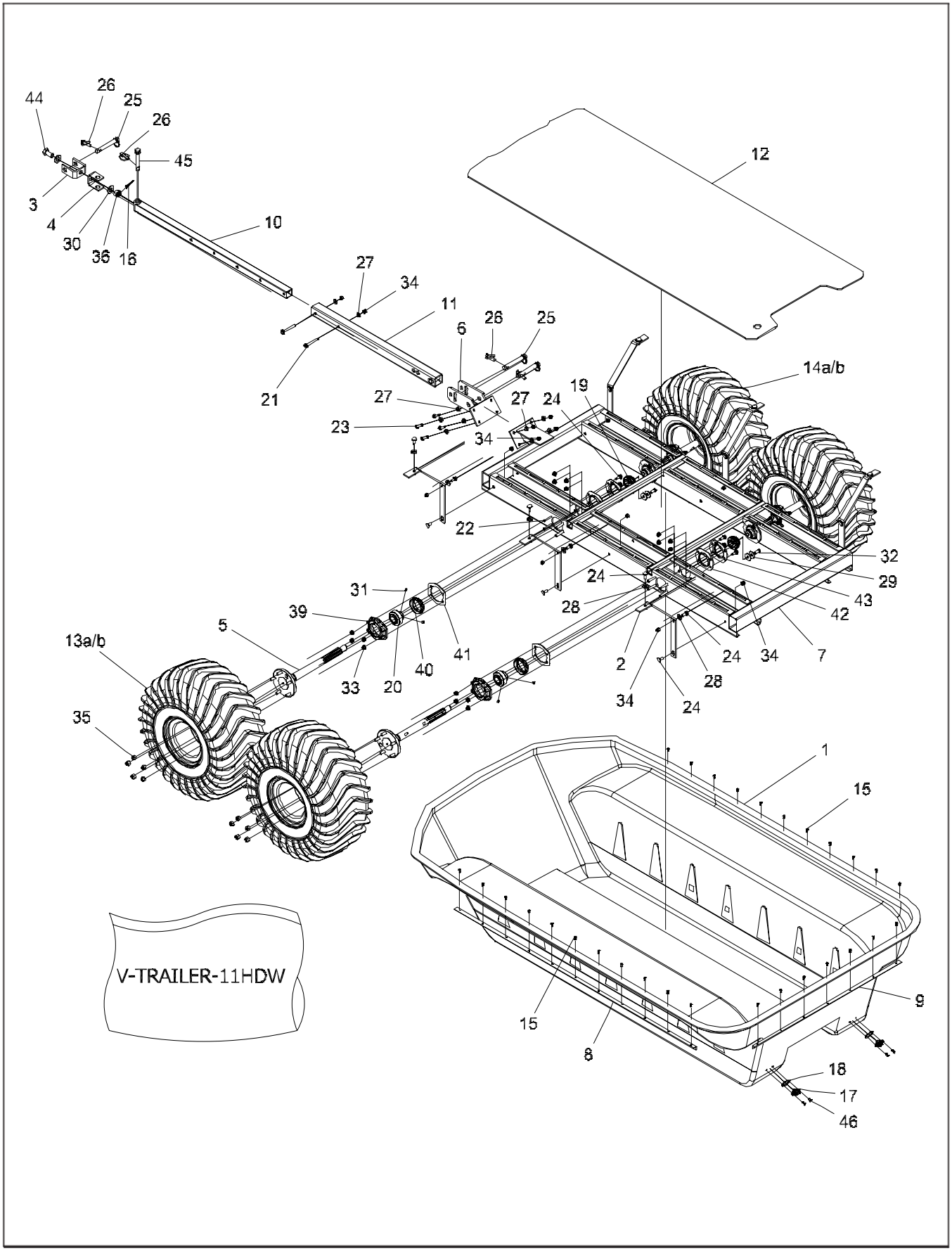
44
26
25
26
45
3
4
30
36
16
10
27
34
11
21
6
26
25
27
23
27
24
19
34
14a/b
12
22
32
29
43
42
24
28
31
39
5
13a/b
33
20
40
41
2
24
34
7
28
34
24
35
1
15
V-TRAILER-11HDW
15
8
9
18
17
46

Ref.	Qty.	Part #	Description
1	1	603-99	BODY, LOWER - FRONTIER
2	6	695-16	SUPPORT, BODY
3	1	695-64	BRACKET, HITCH
4	1	695-71	BRACKET, TONGUE
5	4	810-129	AXLE ASM, 1.25 DIA - 6 TOOTH SPLINE
6	1	695-83	HITCH ASM, TRAILER
7	1	695-88	FRAME ASM, TRAILER
8	2	695-90	BRACKET, SIDE
9	1	695-91	BRACKET, REAR
10	1	695-93	TONGUE ASM
11	1	695-96	TUBE ASM, HITCH
12	1	695-67	FLOOR PAN, TRAILER
13a	2	127-182L	TIRE, ARGO 25 & RIM LH ASSY
13b	2	127-181L	TIRE+RIM ASSY, HEAT, LEFT-AT190
14a	2	127-182R	TIRE, ARGO 25 & RIM RH ASSY
14b	2	127-180R	TIRE+RIM ASSY, HEAT, RIGHT-AT190
15	29	120-13	RIVET - 3/16 x 3/4 BLACK
	1	V-TRAILER-11HDW	**HARDWARE, TRAILER KIT**
16	1	100-01	PIN, COTTER 1/8x1.50
17	2	100-107	PLUG, DRAIN-FLANGED
18	2	100-114	GASKET, DRAIN PLUG
19	4	101-41	BEARING, BALL- 1.0
20	4	101-95	BEARING, BALL -1.25 x 72mm
21	2	103-53	HHCS 3/8-16x3.0 GR 5 FULL THD
22	16	103-68	HHCS 3/8-16x2.0 GR5
23	4	103-82	HHCS 3/8-16x1.5 GR5
24	34	103-88	C/BOLT 3/8-16x1.0 GR5
25	3	104-10	PIN, TOPLINK - 3/4 x 3.75
26	4	104-11	PIN, LYNCH - RING
27	12	108-15	WASHER .42x.81x.05
28	12	108-35	WASHER .53x1.06x.09
29	8	108-46	WASHER .40x1.37x.12 HI-CARBON
30	2	108-53	WASHER .81x1.5x.12
31	8	112-200	SHSS 5/16-24x5/16 FLAT PT
32	4	112-31	HHCS 3/8-16x1.0 2B GR8
33	32	117-118	LOCKNUT, NYLON 3/8-16, FLANGED
34	24	117-29	LOCKNUT, NYLON 3/8-16
35	20	117-35	NUT, WHEEL 7/16-20 ZINC
36	1	117-37	NUT, HEX SLOTTED 3/4-10 ZINC
37	4	120-04	WASHER .19x.50x.08
38	4	120-09	RIVET - 3/16 x 1.0 BLACK
39	4	606-88	FLANGE ASY, OUTER BEARING
40	4	606-89	CARRIER, AXLE BEARING
41	4	606-90	GASKET, FLANGE -72 mm BRG
42	4	606-91	FLANGE, 4-HOLE HD
43	4	606-92	Flange Greasable-4-Hole HD
44	1	695-34	BOLT, SWIVEL
45	1	104-13	PIN, TOP LINK
46	4	10081A001	RIVET, 3/16 x 0.376 - 0.500 AL

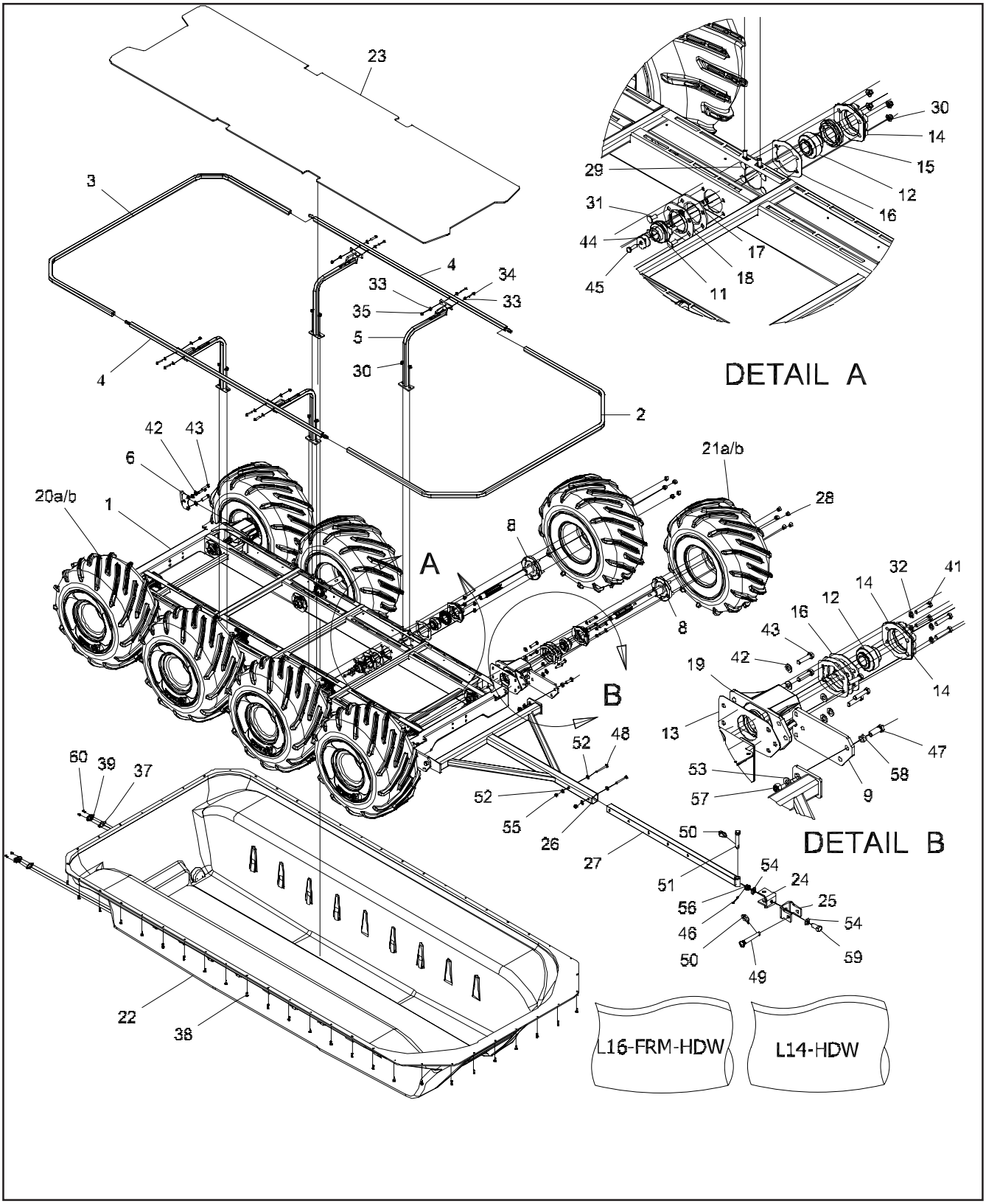
23
3
4
34
33
35
5
30
2
42
43
6
20a/b
1
21a/b
28
8
A
B
60
39
37
22
38
52
48
55
26
27
50
51
54
24
25
56
46
50
49
59
DETAIL A
DETAIL B
L16-FRM-HDW
L14-HDW

8 Wheel Amphibious Trailer

Ref.	Qty.	Part #	Description
1	1	695-100	Frame Asm, 8 Wheel Trailer
1	1	695-100	FRAME ASM, 8 WHEEL TRAILER
2	1	695-104	FRAME, UPPER FRONT - 8W TRLR
3	1	695-105	FRAME, UPPER REAR - 8W TRLR
4	2	695-106	FRAME ASM, UPPER MID - 8W TRLR
5	4	695-109	SUPT ASM, INR SIDE - 8W TRLR
6	2	642-47	TIE DOWN BRACKET
8	8	810-129	AXLE ASM, 1.25 DIA - 6 TOOTH SPLINE
9	2	657-17	BRACKET, SNOWPLOW MTG - AVG
10	1	127-273	PLATE, SERIAL BLANK DOUBLE
11	8	101-41	BEARING, BALL- 1.0
12	8	101-95	BEARING, BALL -1.25 x 72mm
13	4	606-25	GASKET, BEARING EXTENSION
14	8	606-88	FLANGE ASY, OUTER BEARING
15	8	606-89	CARRIER, AXLE BEARING
16	16	606-90	GASKET, FLANGE -72 mm BRG
17	8	606-91	FLANGE, 4-HOLE HD
18	8	606-92	FLANGE, GREASEABLE - 4-HOLE HD
19	4	810-112	EXTENSION ASY, BEARING W/ NUTS
20a	4	127-180R	TIRE & RIM ASM - RIGHT
20b	4	127-182R	TIRE, ARGO 25 & RIM RH ASSY
21a	4	127-182L	TIRE, ARGO 25 & RIM LH ASSY
21b	4	127-181L	TIRE & RIM ASM - LEFT
22	1	695-103	BODY, 8 WHEEL TRAILER
23	1	695-118	PANEL, FLOOR - 8W TRLR
24	1	695-119	BRACKET, TONGUE - THCK RM
25	1	695-120	BRACKET, HITCH - THCK RM
26	1	695-114	HITCH ASSY - 8W TRAILER
27	1	695-93	TONGUE ASM
	1	**L16-FRM-HDW**	**8W TRAILER FRAME HDW**
28	40	117-35	NUT, WHEEL 7/16-20 ZINC
29	16	112-187	C/BOLT 3/8-16x2.0 GR5 ZINC
30	56	117-118	LOCKNUT, NYLON 3/8-16, FLANGED
31	40	103-88	C/BOLT 3/8-16x1.0 GR5 ZINC
32	16	108-06	LOCKWASHER 3/8 SPLIT-RING
33	16	108-08	WASHER .28x.62x.07 ZINC
34	8	103-03	PHMS 1/4-20x1.50 ZINC
35	8	117-27	LOCKNUT, NYLON 1/4-20 ZINC
36	4	120-04	WASHER .19x.50x.08 ZINC
37	2	100-114	GASKET, DRAIN PLUG
38	50	112-102	SCREW, SELF DRILL 12-14 x3/4"
39	2	100-107	PLUG, DRAIN-FLANGED
41	16	103-68	HHCS 3/8-16x2.0 GR5 ZINC
42	20	108-34	WASHER .47x.94x.06 ZINC
43	20	112-181	HHCS 7/16-20x1.75 GR5 ZN
44	16	108-46	WASHER .40x1.37x.12 Hi-Carbon
45	8	112-31	HHCS 3/8-16x1.0 2B GR8 ZINC

Ref.	Qty.	Part #	Description
	1	**L14-HDW**	**8W TRAILER HARDWARE**
46	1	100-01	PIN, COTTER 1/8x1.50
47	2	103-21	HHCS 1/2-20x1.5 GR5 BNZ
48	2	103-53	HHCS 3/8-16x3.0 GR 5 FULL THD
49	1	104-10	PIN + RING ASM
50	2	104-11	PIN, LYNCH - RING
51	1	104-13	PIN, TOP LINK
52	4	108-15	WASHER .42x.81x.05
53	2	108-35	WASHER .53x1.06x.09
54	2	108-53	WASHER .81x1.5x.12
55	2	117-29	LOCKNUT, NYLON 3/8-16
56	1	117-37	NUT, HEX SLOTTED 3/4-10
57	2	117-57	LOCKNUT, NYLOC 1/2-20
58	2	657-54	BUSHING
59	1	695-121	BOLT, SWIVEL 3/4-10x1.75
60	4	10081A001	RIVET, 3/16 x 0.376-0.50 AL

*New accessory 10636C Acc, Trailer Cover-8x8 now available (see page 54).

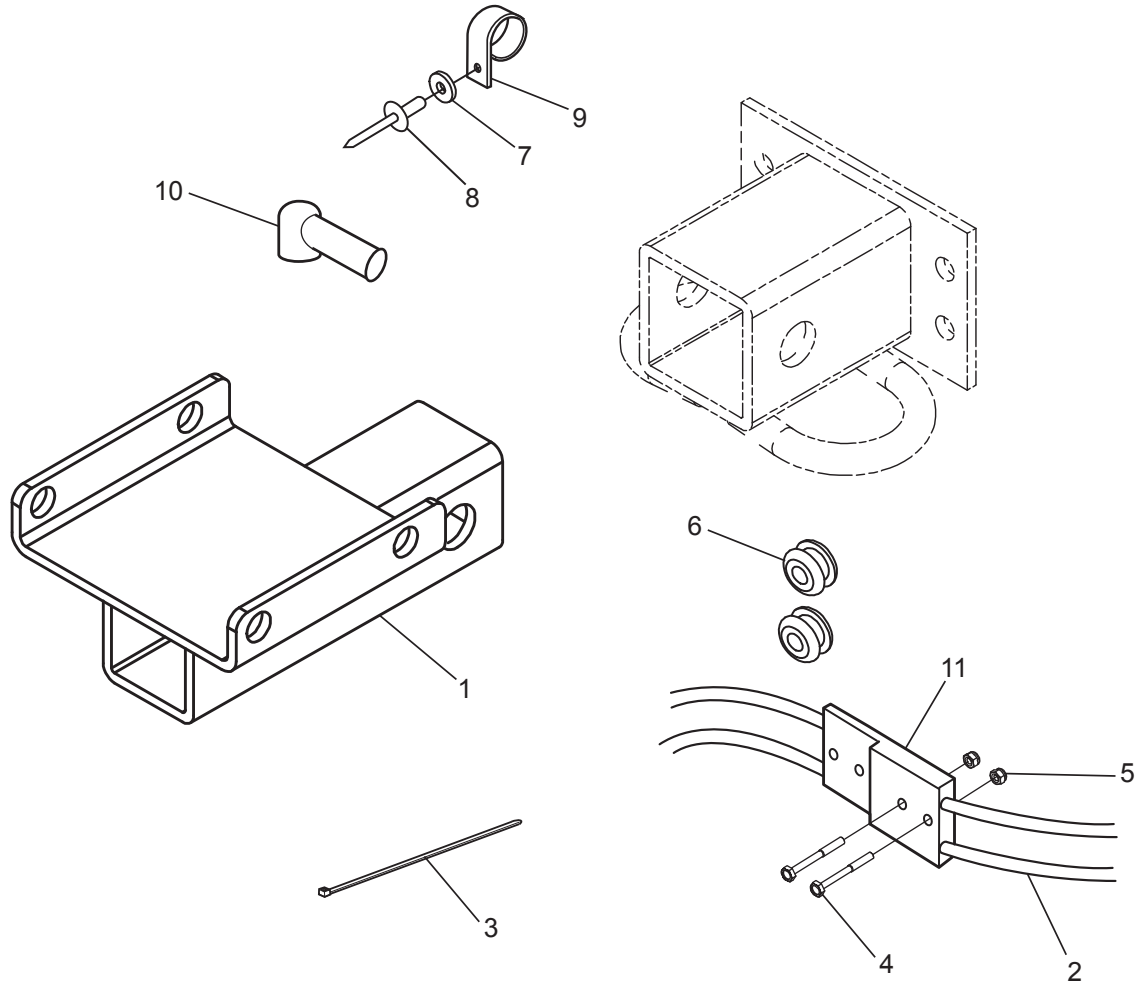

Ref.	Qty.	Part #	Description
1	1	622-134	Receiver, Rear Winch
2	1	622-116	Wire Harness, Receiver Winch
3	2	100-64	Tie Wrap - 5.5" - Black
4	2	112-126	HHCS M3x0,5 x 30 Cl 8.8 Zn
5	2	117-78	Locknut, Nylon M3 x 0.5" Zn
6	2	125-84	Grommet, Rubber
7	4	120-04	Washer .19X.50x.08 Zn
8	4	120-09	Rivet - 3/16 x 1.0 Black
9	4	127-287	Clamp, Nylon Wire - 3/4" ID
10	2	613-46	Terminal, Insulator
11	1	118-72	Connector Housing, Anderson

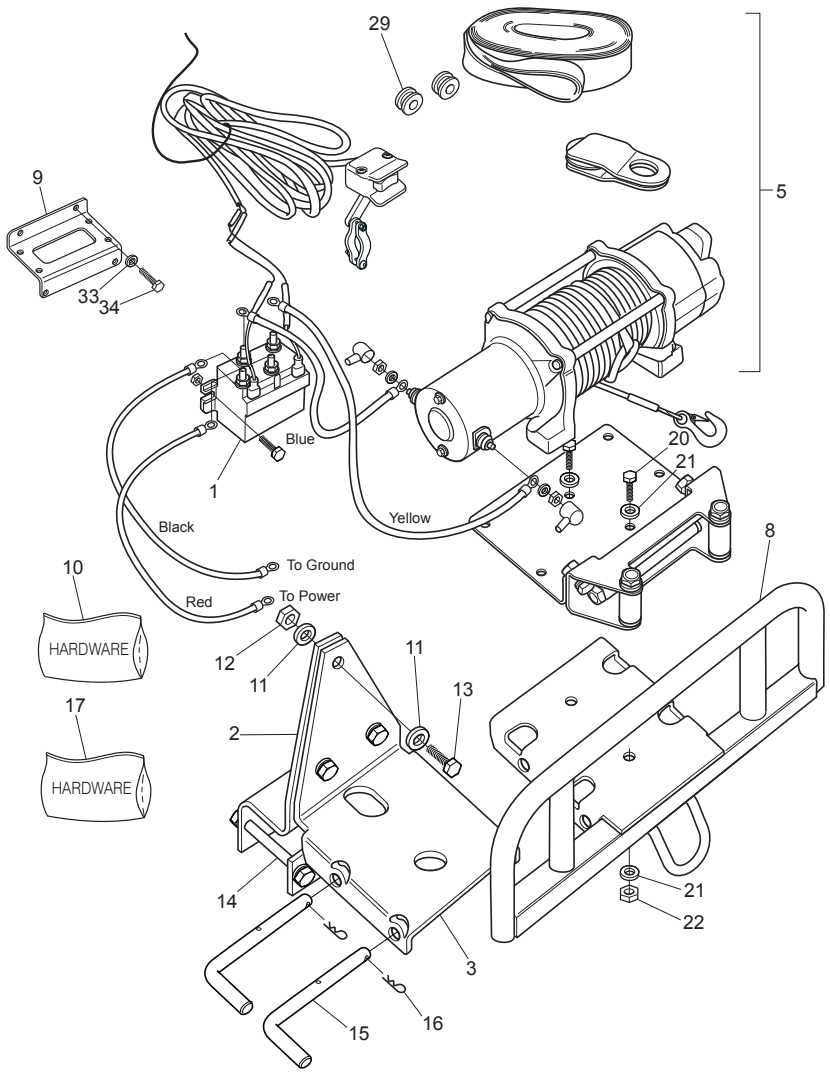

Ref.	Qty.	Part #	Description
1	1	622-141	Solenoid, Winch, Warn
2	1	950-03	ASM, FR INR Winch Supt - XT
3	1	950-04	ASM, FR OTR Winch Supt - XT
5	1	622-140	Winch, Pro Vantage 4500, Warn
8	1	622-130	Winch Mount W/Guard
9	1	953-08	Mount, Engine ECU
10	**1**	**622-131HDW**	**Hardware Kit Comprised of:**
11	10	108-15	Washer .42x.81x.05 Zn
12	5	117-60	Locknut, Nylon 3/8-16 Zn
13	3	112-133	HHCS M10x1,5x35mm Zn
14	2	112-120	HHCS M10x1,5x80mm Zn
15	2	622-85	Release Pin, Receiver Winch
16	2	100-16	Clip, Hitch Pin 1.625 Zn
17	**1**	**622-145HDW**	**Hardware Kit Comprised of:**
18	3	120-09	Rivet - 3/16 x 1.0 Black
19	2	120-04	Washer .19 x .50 x .08 Zn

Ref.	Qty.	Part #	Description
20	2	103-34	HHCS 3/8-16 x 1.25 Gr5 Zn
21	4	108-47	Washer .39 x .94 x .13 Zn
22	2	117-29	Locknut, Nylon 3/8-16
23	4	100-64	Tie Wrap - 5.5" Black
24	2	112-126	HHCS M3 x 0,5 x 30 CL 8.8 Zn
25	2	117-78	Locknut, Nylon M3 x 0.5" Zn
26	1	118-02	Terminal, Male - #76-1251
27	1	118-04	Connector, T-Tap 14-18 AWG
28	1	118-32	Terminal, 1/4" Male 22-18 AWG
29	2	125-84	Grommet, Rubber
30	1	118-74	Terminal, 5/16" Ring, 6GA
33	2	108-03	Lockwasher 1/4 Split Ring Zn
34	2	112-118	HHCS M6x1,0x15mm
35	2	810-107	Connector, Two Wire - 6 Gauge

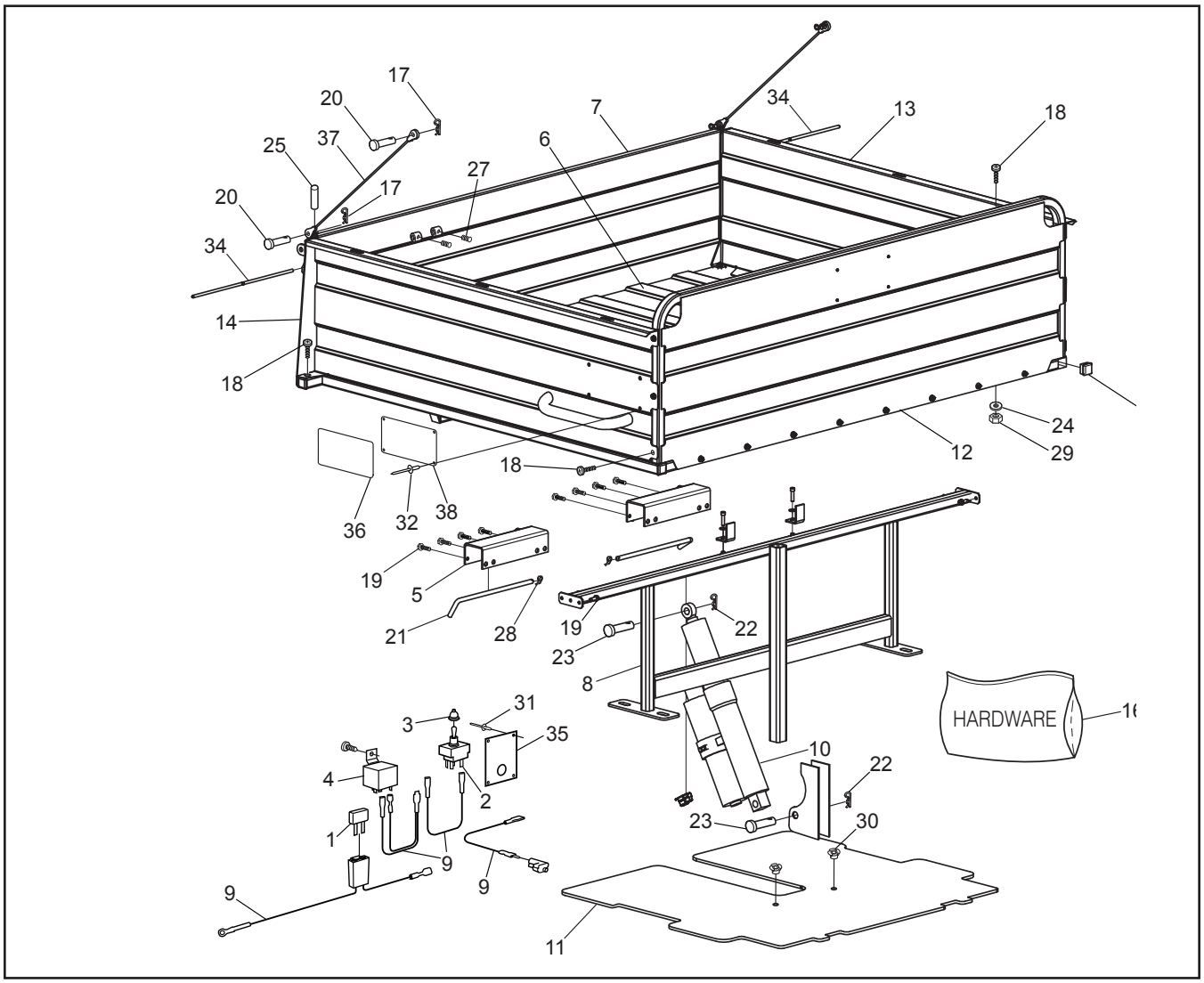

Ref.	Qty.	Part #	Description
1	1	613-83	Breaker, Circuit - 25 Amp
2	1	613-84	Switch, Toggle - 25 Amp-Reversing
3	1	613-85	Seal, Toggle Switch
4	1	613-86	Relay, 40 Amp
5	2	835-160	Hinge,Support Brkt -Cent Dump
6	1	835-301	Dumpbox, Box Asm - XT/Cent
7	1	835-302	Dumpbox, Gate Asm - XT/Cent
8	1	835-303	Dumpbox, Support Asm - XT/Cent
9	1	835-304	Wire Harness Kit, Dumpbox
10	1	835-305	Actuator, 14” Stroke - KYB
11	1	835-306	Floorpan, Flexible - XT/Cent
12	1	835-307	Panel, Front - D-Box XT
13	1	835-308	Panel, Left Side - D-Box XT
14	1	835-309	Panel, Welded Asm - RH Dump
16	**1**	**835-300HDW**	**Hardware, Dumpbox - CT/XT consisting of the following:**
17	4	100-16	Clip, Hitch Pin 1.625 Zn
18	14	103-31	PHMS 1/4-20X5/8 Grade 5 Zn
19	30	103-72	Screw, IHWH T/C Slot 1/4-20x3/4

Ref.	Qty.	Part #	Description
20	4	104-25	Pin, Clevis 3/8x3/4 Zn
21	2	104-32	Pin, Pull
22	2	104-68	Hairpin, Cotter 1/2-3/4 Dia
23	2	104-79	Pin, Clevis 5/8x1.75
24	16	108-08	Washer .28x.62x.07 Zn
25	2	111-09	Pin, Spring 5/32x.75 - Slotted
26	2	112-47	SHCS 1/4-20x1.0 Zn
27	4	112-68	SHSS 1/4-20x1/4 Knurl Pt. Zn
28	2	113-10	Ring, Cotter 3/8” Shaft
29	13	117-27	Locknut, Nylon 1/4-20 Zn
30	2	117-44	T-Nut 1/4-20 Zn
31	4	120-24	Rivet, Alum - 3/32 x 3/8 Black
32	12	120-25	Rivet - 1/8 x 5/16
33	4	127-282	Plug, 1” Sq Tube
34	2	615-02	Pin, Track - Chamfered+Ground
35	1	835-03	Label, Switch - Dumpbox
36	3	835-102	Label, Warning - Centuar Dumpbox
37	2	835-122	Cable, Dumpbox Tailgate-Cent
38	3	835-166	Mount, Cent Dump Label

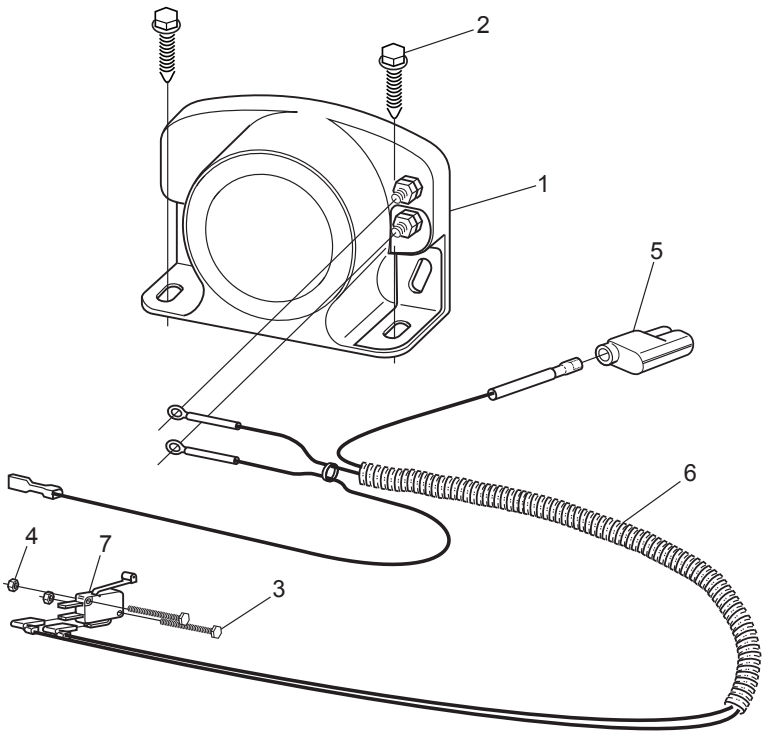

Ref.	Qty.	Part #	Description
1	1	848-126	Alarm, Back-up
2	2	112-102	Screw, Self-Drill 12-14 x 3/4"
3	2	112-126	HHCS M3x0,5x30 CL 8.8 Zn
4	2	117-78	Locknut, Nylon M3x 0.5" Zn
5	1	118-04	Connector, T-Tap 14-18 Awg
6	1	613-113	Wire Harness, Back-up Alarm
7	1	809-202	Switch, Limit - Two Pole

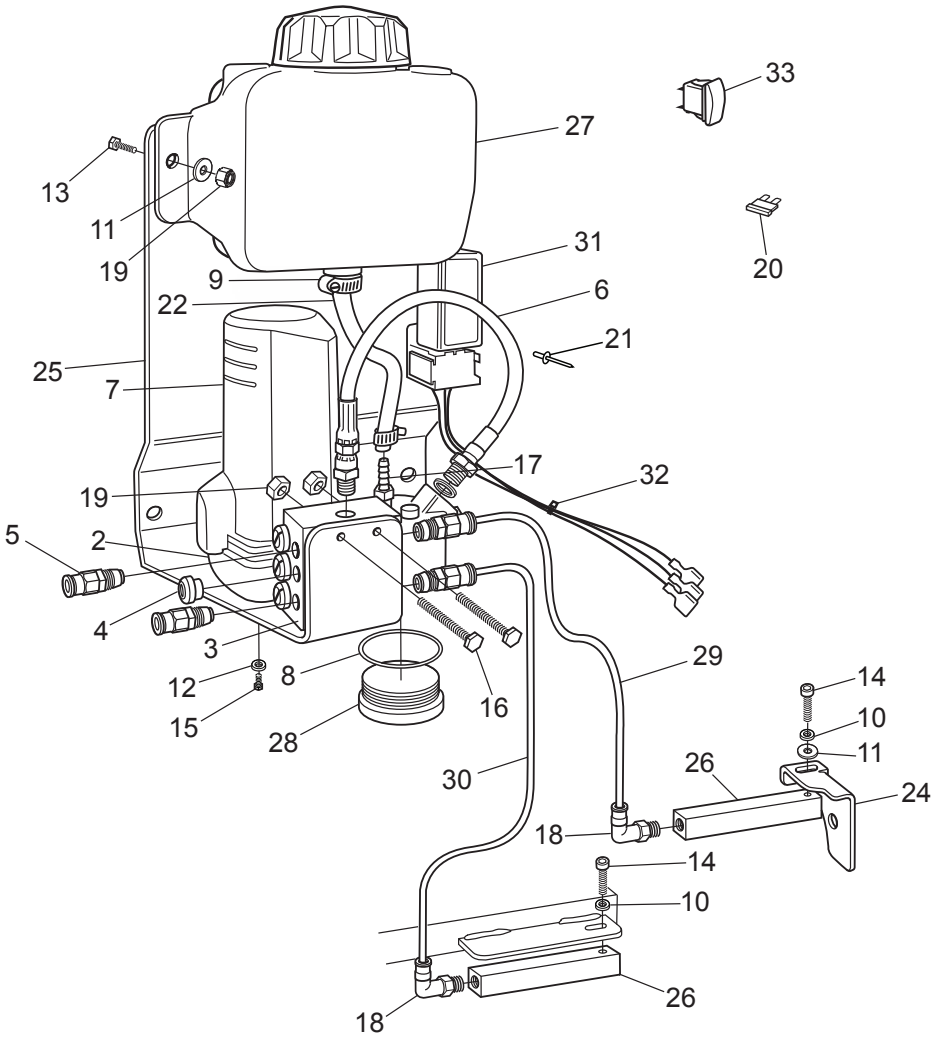

Ref.	Qty.	Part #	Description
1	1	850-214	Kit, Chain Oiler Purch Comp.
2	1	850-201	Pump, Oil System Lincoln 12V
3	1	850-202	Valve, Oil System Diverter
4	2	850-203	Plug, Valve Diverter
5	4	850-204	Adapter, Outlet 1/4" W/CHK
6	1	850-205	Hose, Oil Pump Outlet 12"
7	1	850-210	Cover, Oil Pump Motor
8	1	850-211	Seal, Oil Pump Cap
9	2	100-101	Clamp, Gear 1/2" HF4 or MH-4
10	4	108-03	Lockwasher 1/4 Split Ring Zn
11	4	108-08	Washer .28 x .62 x .07 Zn
12	4	108-100	Lockwasher, #10 Split-Ring Zn
13	2	112-04	HHCS 1/4-20 x 3/4 Gr5 Zn
14	4	112-47	SHCS 1/4-20 x 1.0 Zn
15	4	112-95	HHCS M5 x 0,8 x 10mm Zn
16	2	112-202	HHCS 1/4-20 x 1.75 Gr5 Zn
17	1	113-20	Fitting, 1/8 Npt x 1/4 Barb
18	4	113-21	Fitting, 1/8 x 90 Male Push Conn.
19	4	117-27	Locknut, Nylon 1/4-20 Zn
20	1	118-52	Fuse, 10A 2-Prong (ATC010)
21	1	120-13	Rivet - 3/16 x 3/4 Black

Ref.	Qty.	Part #	Description
22	1	127-160-7	Hose, 1/4 ID x 3/8 OD - 7" Long
23	1	850-197	Bracket, Oil Applicator Front LH XT (not shown)
24	1	850-222	Bracket, Oil Applicator Front RH XT
25	1	850-226	Bracket, Oil System Pump Res. XT
26	4	850-198	Tube, Oiler XT
27	1	850-196	Reservoir 1 Qt.
28	1	850-200	Plug, Oil Pump Threaded
29	2	850-206-5	Tubing, 1/4 OD Oil - 5 ft.
30	2	850-206-9	Tubing, 1/4 OD Oil - 9 ft.
31	1	850-207	Timer, Oil System
32	1	850-220	Harness, Oil System XT
33	1	850-209	Switch, Oil System Momentary
34	1	850-221	Harness, Oil System Pump (not shown)
35	0.875	613-207RM	Loom, Nylon .25 ID
36	1	850-244	Wire Harness, Timer Interrupt
37	2	112-02	SHSS 10-24 x 1/4 Knurl, Bare

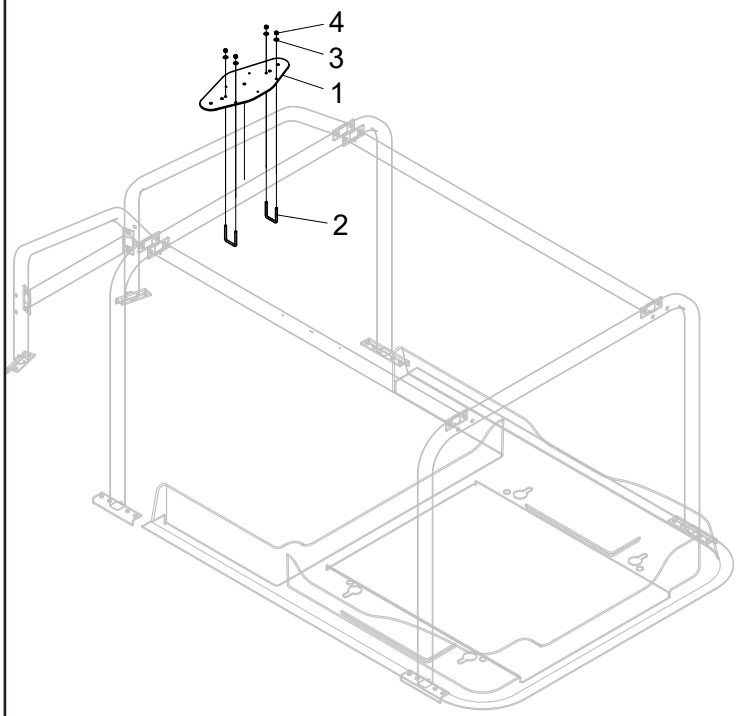

ARGO INSTALLATION

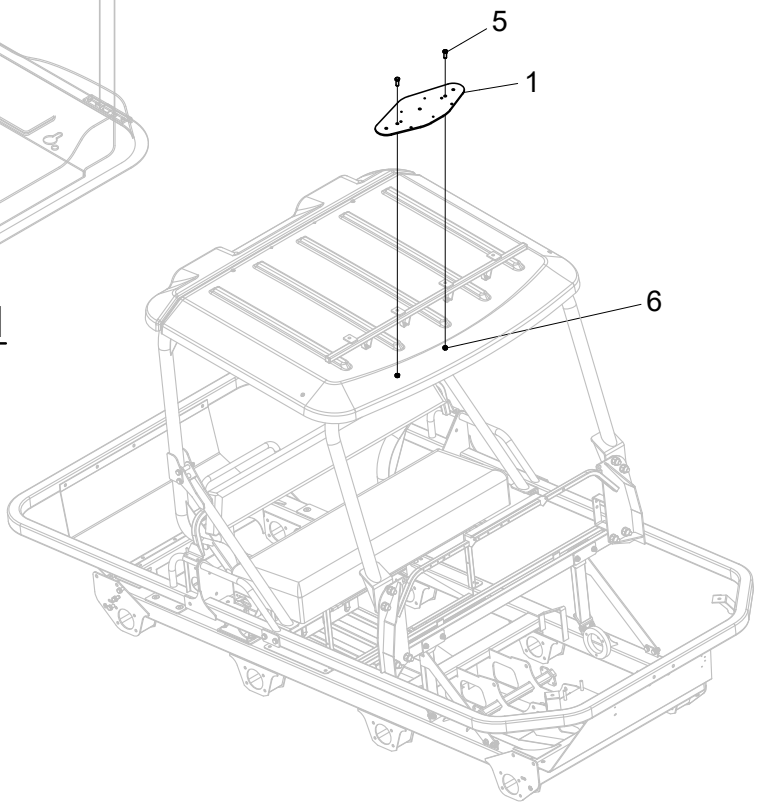

XT INSTALLATION

Ref.	Qty	Part #	Description
1	1	850-293	PLATE, LIGHT MOUNT
2	2	863-29	U-BOLT, 1/4-20 - ZINC
3	4	108-08	WASHER .28x.62x.07 ZINC
4	4	117-27	LOCKNUT, NYLON 1/4-20 ZINC
5	2	103-17	HHCS 3/8-16x1.0 GR5 ZINC
6	2	117-14	LOCKNUT, CENTERLOCK 3/8-16 ZNC

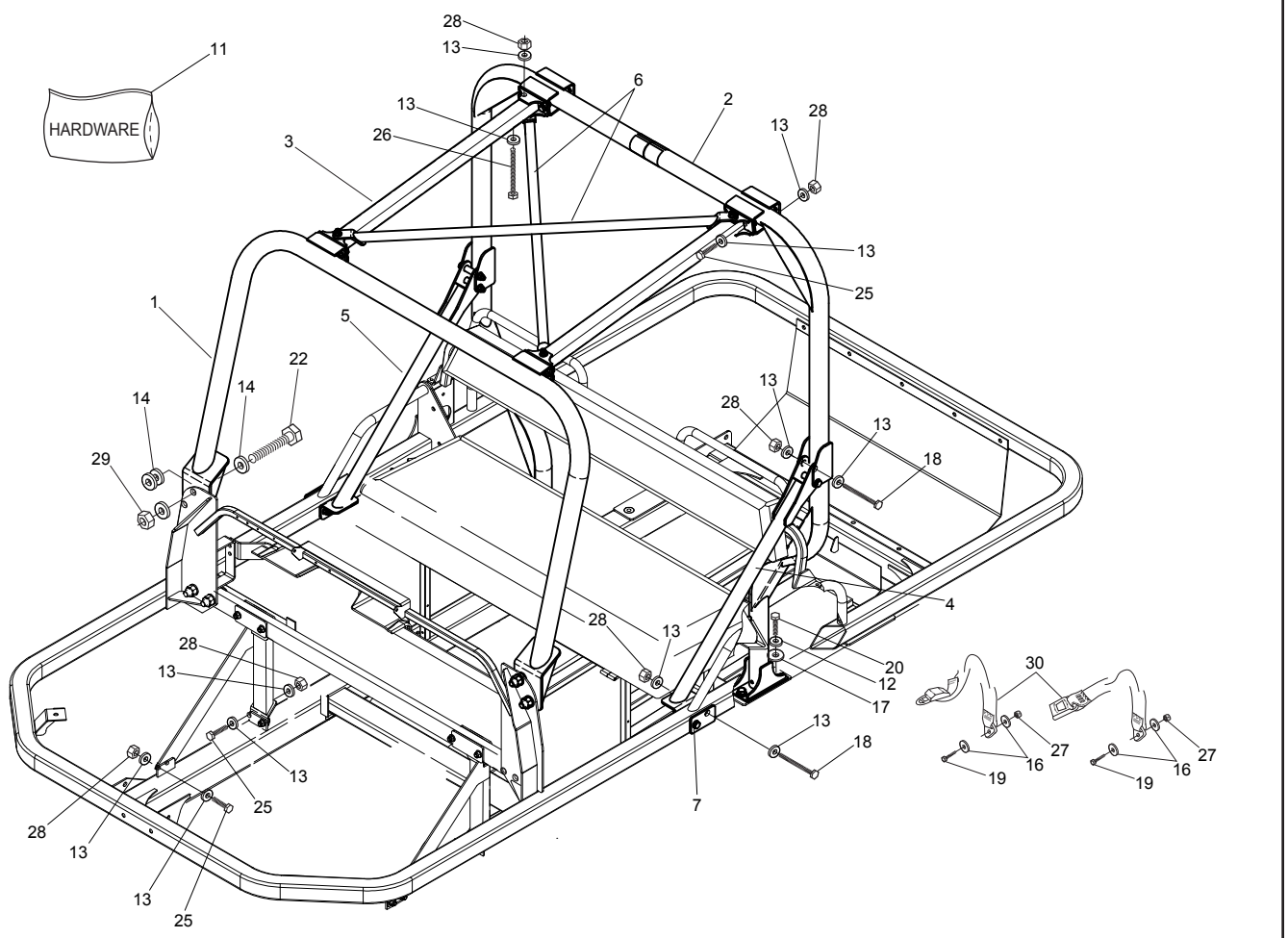

Ref.	Qty.	Part #	Description
1	1	956-01	ROPS Hoop, Fwd, XT
2	1	956-02	ROPS Hoop, Mid, XT
3	2	956-07	Brace, Fwd ROPS
4	1	956-09	Strut, ROPS Side, LH
5	1	956-10	Strut, ROPS Side, RH
6	2	956-11	Crossbrace, ROPS, Top
7	2	957-41	Plate, ROPS Brace, Mount
11	**1**	**956-15HDW**	**Hardware, 2-Person ROPS, XT**
12	4	108-107	Lockwasher 1/2" High Alloy
13	40	108-101	Washer, 10mm, DIN125A
14	16	108-102	Washer, 16mm, DIN125A
15	4	108-27	Lockwasher 7/16 Split-Ring Zn
16	6	108-34	Washer .47x.94x.06 Zn
17	4	108-35	Washer .53x1.06x.09 Zn

Ref.	Qty.	Part #	Description
18	8	112-120	HHCS M10x1,5x80mm Zn
19	3	112-229	HHCS 7/16-20x1.25" Lg Gr5
20	4	112-189	HHCS 1/2-13x1.25 Gr5 Zn
22	4	112-208	HHCS, M16x2x50mm
23	4	112-210	HHCS, 7/16-20 x 0.75
25	8	112-93	HHCS M10x1,5x25mm
26	4	112-94	HHCS, M10 x 1, 5 x 70mm Zn
27	3	117-32	Locknut, Nylon 7/16-20 Zn
28	20	117-60	Locknut, Nyloc M10x1.5mm Zn
29	4	117-76	Locknut, Nylon M16x2,0 Zn
30	2	848-56	Seat Belt Assembly C/W Label

956-16 (4) Person ROPS

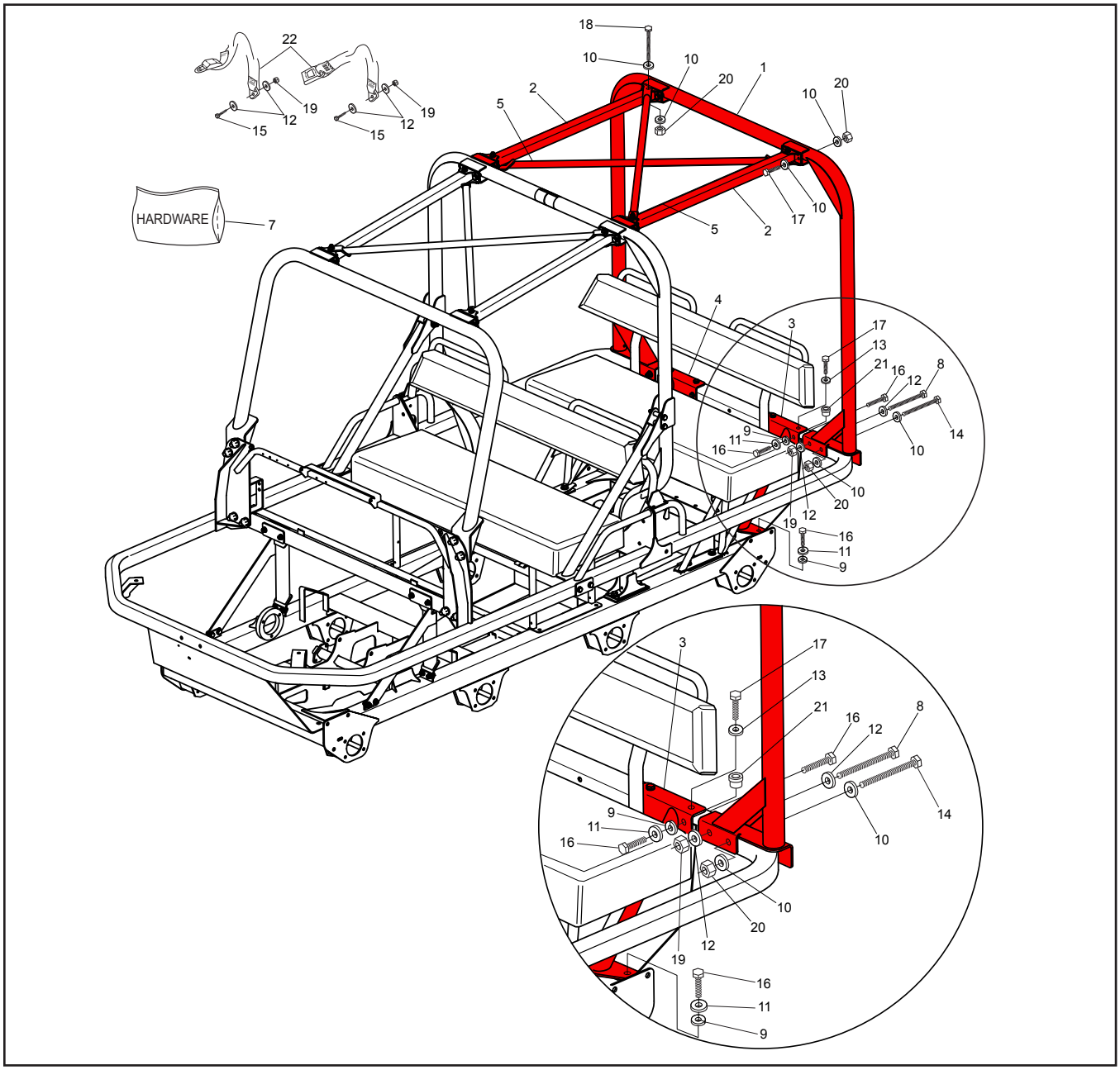

Ref.	Qty.	Part #	Description
1	1	956-03	Rops Hoop, Rear, XTI
2	2	956-08	Brace, Rear Rops
3	1	956-12	Rops Support, Rear, LH
4	1	956-13	Rops Support, Rear, RH
5	2	956-14	Crossbrace, Rops, Rear
7	**1**	**956-16HDW**	**Hardware, 4-Person ROPS, XTI**
8	2	103-74	HHCS 7/16-20x3.25 Gr5 Zn
9	8	108-05	Lockwasher 5/16 Split-Ring
10	28	108-101	Washer, 10mm, Din 125A
11	8	108-24	Washer .34x.70x.06 Zn
12	8	108-34	Washer .47x.94x.06 Zn

Ref.	Qty.	Part #	Description
13	4	108-67	Lockwasher M10 Split-Ring Zn
14	2	112-120	HHCS M10x1,5x80mm Zn
15	2	112-150	HHCS 7/16-20x1.5" Lg Gr5
16	8	112-63	HHCS M8x1,25x35mm Gr5 Zn
17	12	112-93	HHCS M10x1,5x25mm
18	4	112-94	HHCS, M10x1,5x70mm
19	4	117-32	Locknut, Nylon 7/16-20 Zn
20	14	117-60	Locknut, Nyloc M10x1.5mm Zn
21	4	117-70	Insert, M10x1.5-13.5mm OD
22	2	848-56	Seat Belt Assembly C/W Label

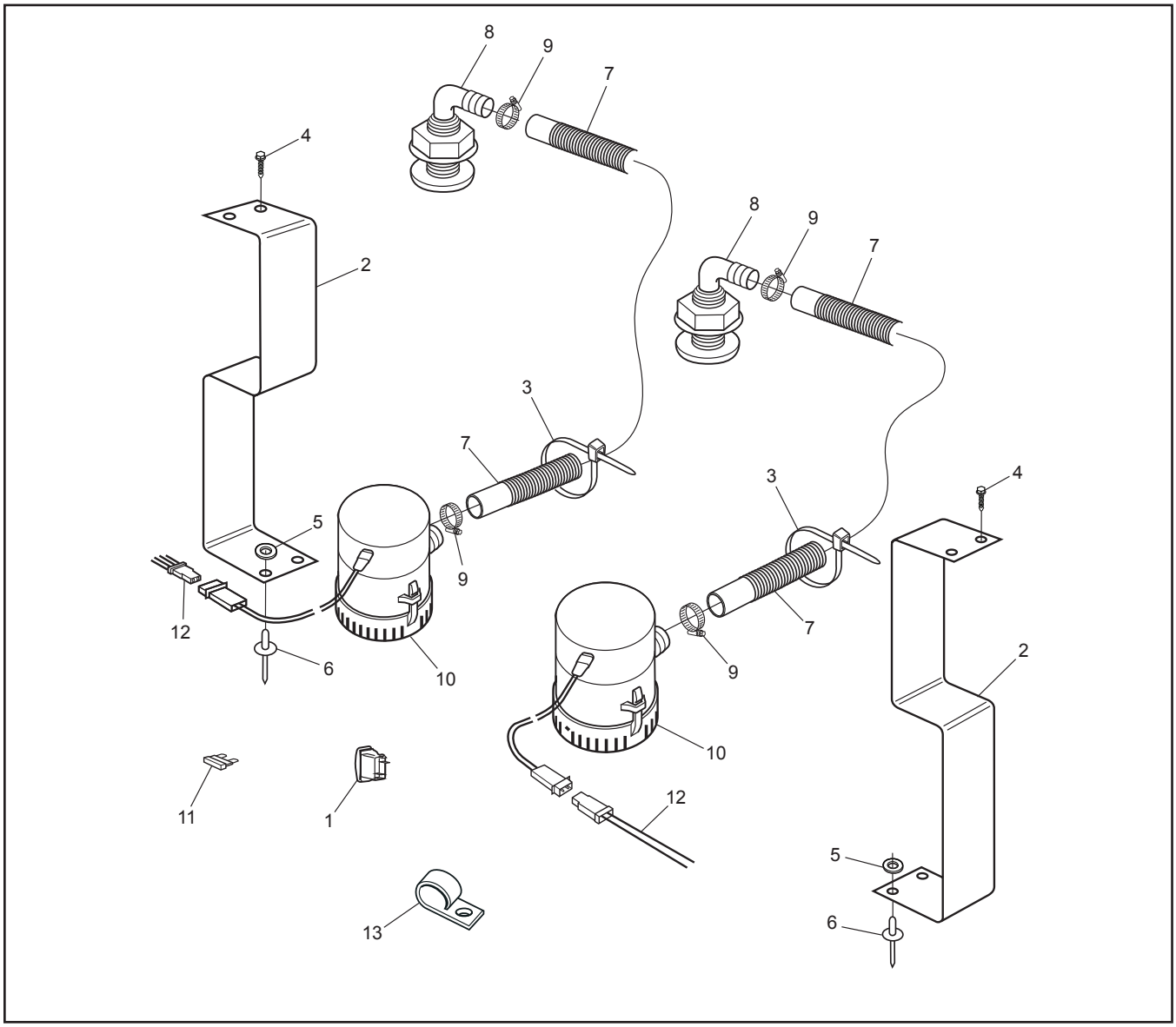

Ref.	Qty.	Part #	Description
1	1	613-154	Switch, Bilge Pump
2	2	849-144	Bracket, Bilge Pump
3	8	100-102	Tie Wrap - 14" – White
4	6	112-102	Screw, Self Drilling – 12-14 x 3/4"
5	4	120-04	Washer, 3/16"
6	4	120-11	Rivet, 5/32” x .252" - .500"
7	2	638-05	Flex Hose, 3/4" x 3'
8	2	958-153	Hull 3/4"W/ 90 Deg. Fitting
9	4	638-16	Gear Clamp
10	2	10002B	Bilge Pump with Connector
11	1	118-52	Fuse, 10A 2-Prong
12	1	613-200	Wire Harness, Bilge Pump XT
13	2	127-24	Clamp, Nylon - 1" ID

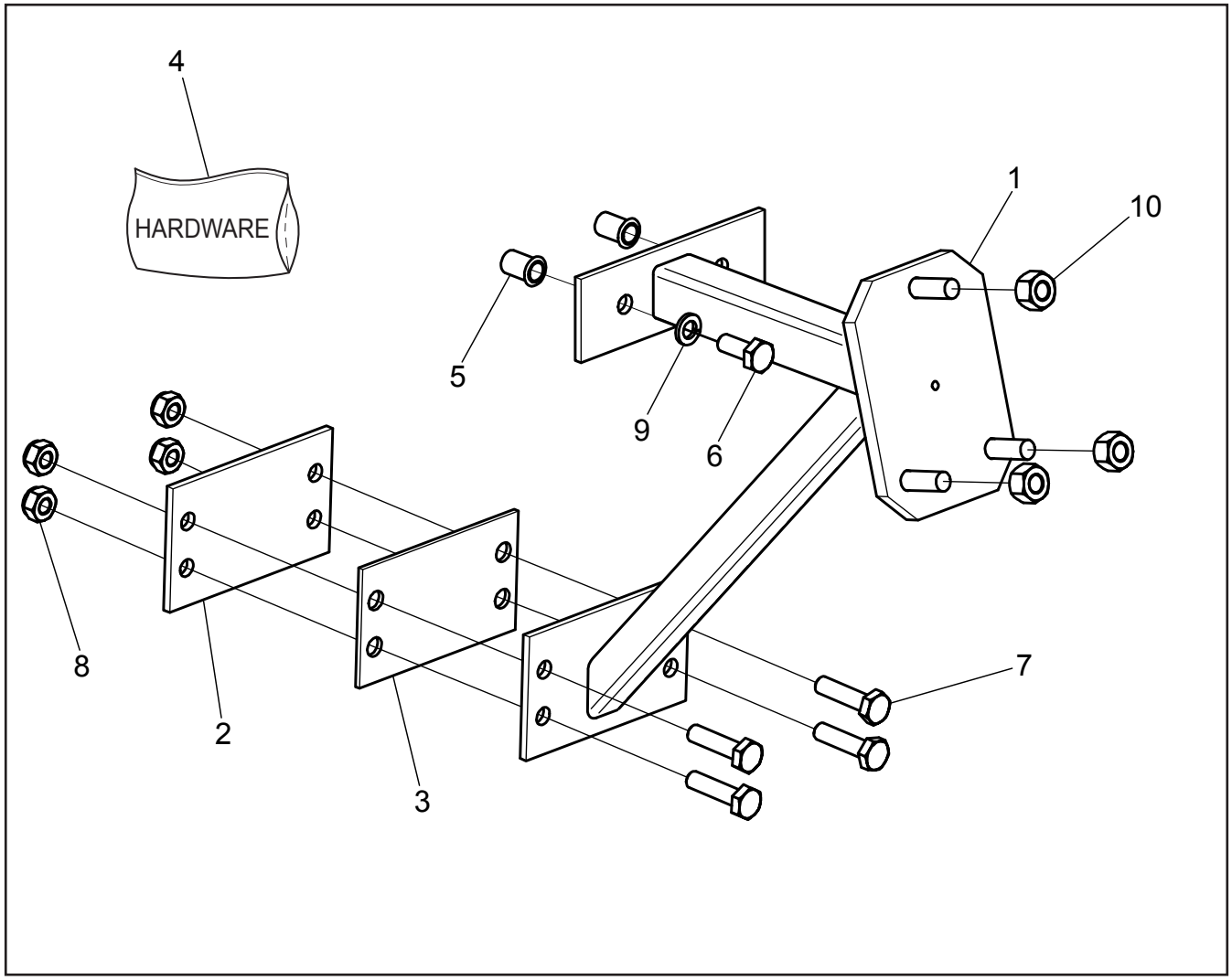

Ref.	Qty.	Part #	Description
1	1	958-76	Asm, Tire Carrier-XT
2	1	616-18	Plate, Hitch
3	1	616-20	Gasket, Rear Hitch
4	**1**	**958-75HDW**	**Hardware, Tire Carrier-XT**
5	2	117-70	Insert, M10x1.5-13.5mm OD
6	2	112-93	HHCS M10x1,5x25mm
7	4	112-92	HHCS M10x1,5x40mm Zn
8	4	117-60	Locknut, Nyloc M10x1.5mm Zn
9	2	108-67	Lockwasher M10 Split-Ring Zn
10	3	117-35	Nut, Wheel 7/16-20 Zn

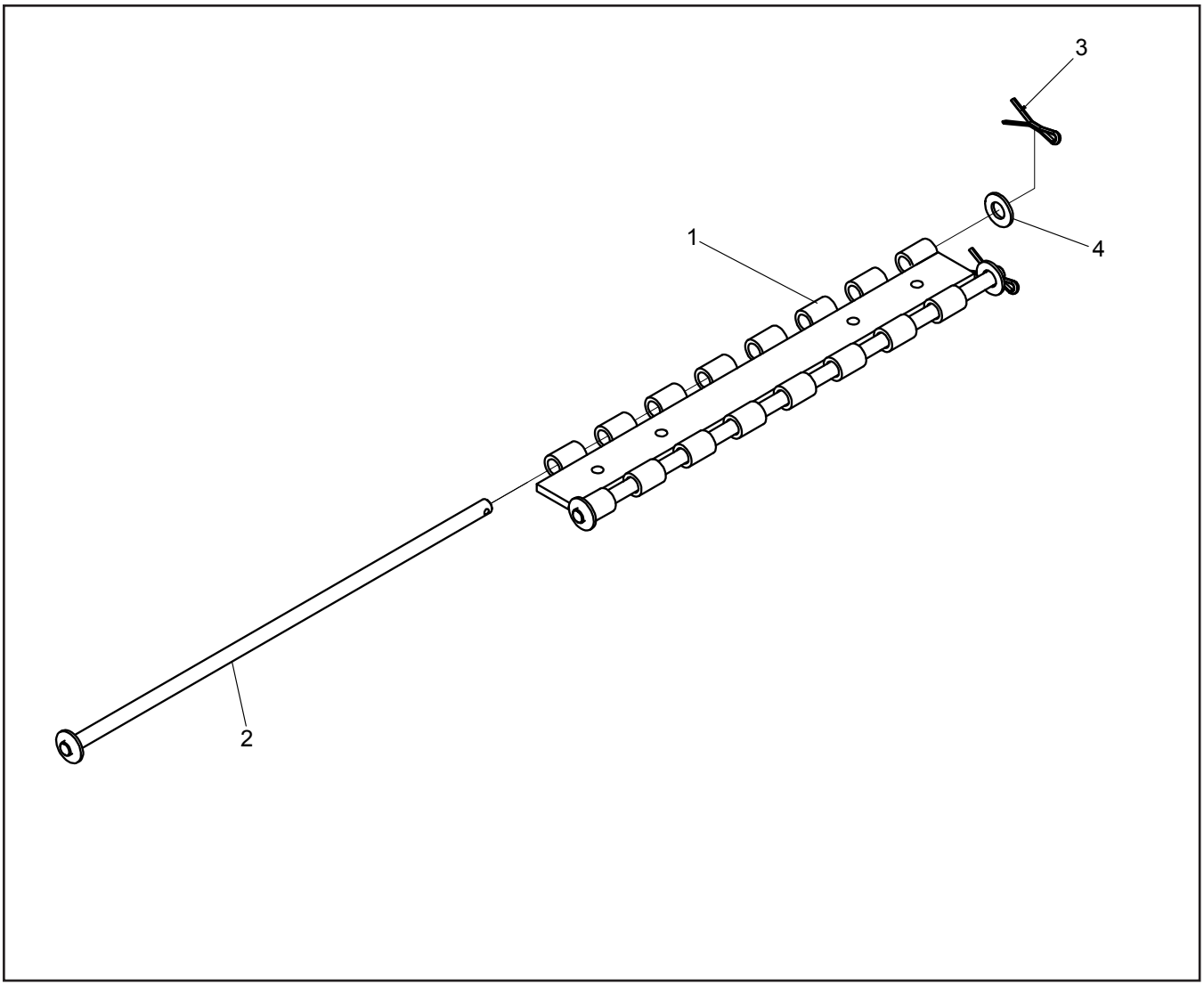

Ref.	Qty.	Part #	Description
1	4	849-241	Spacer, Track 16.5"
2	4	849-247	Rod, Hinge Asm
3	4	104-71	Pin, Cotter 3/16x1.25 Zn
4	4	108-35	Washer .53x1.06x.09 Zn

958-80 Fuel Carrier

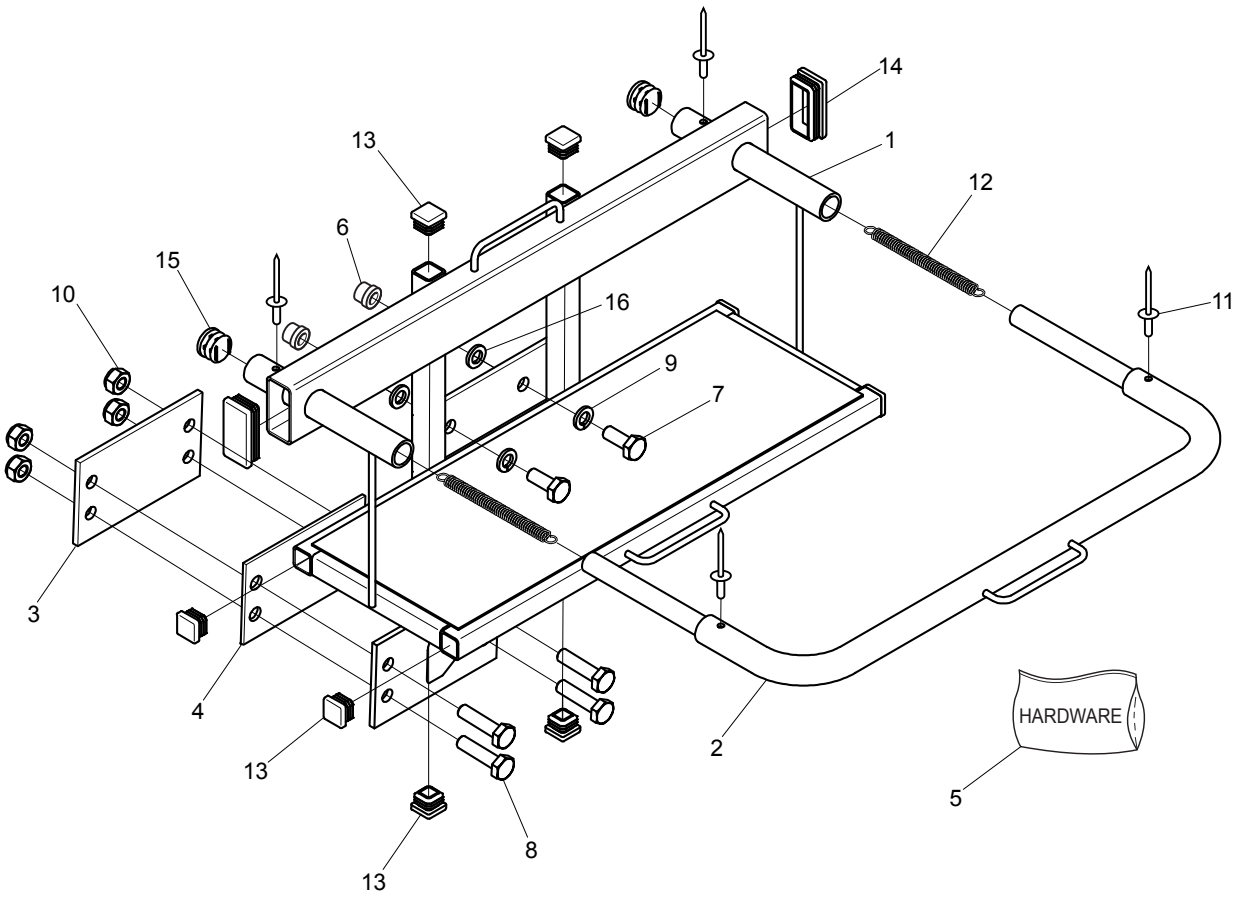

Ref.	Qty.	Part #	Description
1	1	958-81	Asm, Can Carrier
2	1	867-04	Asm, Can Carrier - Restraint
3	1	616-18	Plate, Hitch
4	1	616-20	Gasket, Rear Hitch
5	**1**	**958-80HDW**	**HDW, Gas Can Carrier-XT**
6	2	117-70	Insert, M10x1.5-13.5mm OD
7	2	112-93	HHCS M10x1,5x25mm
8	4	112-92	HHCS M10x1,5x40mm Zn
9	2	108-67	Lockwasher M10 Split-Ring Zn
10	4	117-60	Locknut, Nyloc M10x1.5mm Zn8
11	4	120-32	Rivet, 3/16 x 1.075 Black
12	2	127-224	Spring, Ext. 3/8 x 4.5"
13	8	867-18	Plug, End 3/4" Tube-Black
14	2	867-19	Plug, End 1.0 x 2.0 Tube-Black
15	2	867-17	Plug, OD 7/8" ID 0.685"-Black
16	2	108-47	Washer .39x.94x13 Zn Di-Chro

958-88HD Track, Kit
958-88HD-ASM Track, Assembled

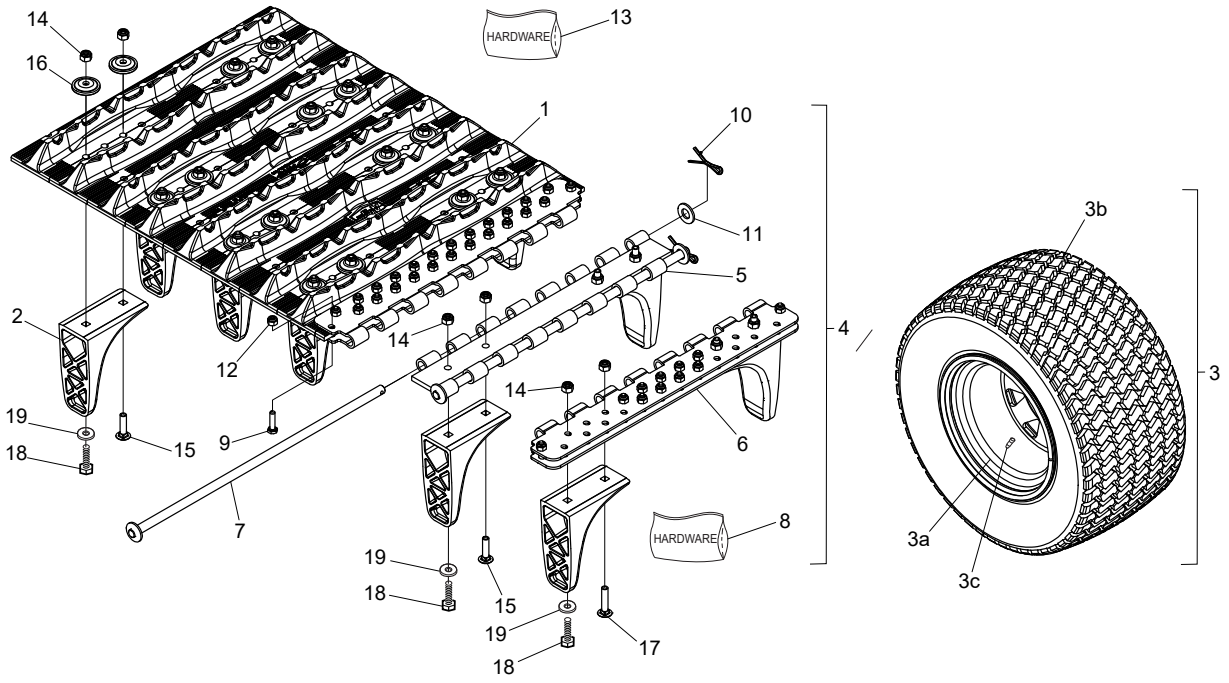

Also Available:
958-88-ASM (Track Assembled w/o tires, w/Ext, for 25" tires)
958-88 (Track Kit, w/o tires, w/Ext, for 25" tires)
958-88HD-NT (Kit w/o tires, w/o Ext, for 24" tires)

Ref.	Qty.	Part #	Description
1	2	825-51-1	Track, Rubber - Argo
2	180	825-71	Guide, HD Track -UHMW-PE
3	8	127-215	Tire + Rim Ass'y - Multitrac XT HD (incl. Ref. 3a, 3b & 3c)
3a		127-281	Rim -12x9.5x2.25 Offset-Rein
3b		127-227	Tire, Multi-Trac XT 24x12-12
3c		125-26A	Valve, Tire - Unassembled
4	**1**	**958-91**	**Hinge Set & Extensions - HD, XT includes the following:**
5	2	849-241	Spacer, Track Lacing
6	4	849-302	Hinge, Track, HD
7	4	849-247	Rod, Hinge Ass'y
8	**1**	**958-91HDW**	**Hardware Kit, Hinge Set, Tracks HD, XT includes the following:**

Ref.	Qty.	Part #	Description
9	100	103-08	HHCS 1/4-20 x 1.0 Zn
10	4	104-71	Pin, Cotter 3/16 x 1.25 Zn
11	4	108-35	Washer .53 x 1.06 x .09 Zn
12	100	117-27	Locknut, Nylon 1/4-20 Zn
13	**1**	**958-88HD-HDW**	**Hardware Kit - Rubber Tracks - HD, XT includes the following:**
14	360	117-21	Locknut, Nylon 5/16-18"
15	180	112-155	Bolt, Carriage
16	360	108-110	Washer, Concave 5/16 IDx1-3/8"
17	8	112-11	C/Bolt 5/16-18 x 1.5 Gr5 Zn
18	180	103-38	HHCS 5/16-18x1.25 Gr5 Zn
19	180	108-113	Washer .33x.88x.08 L9 Eco

958-88-4HD Track Assembly

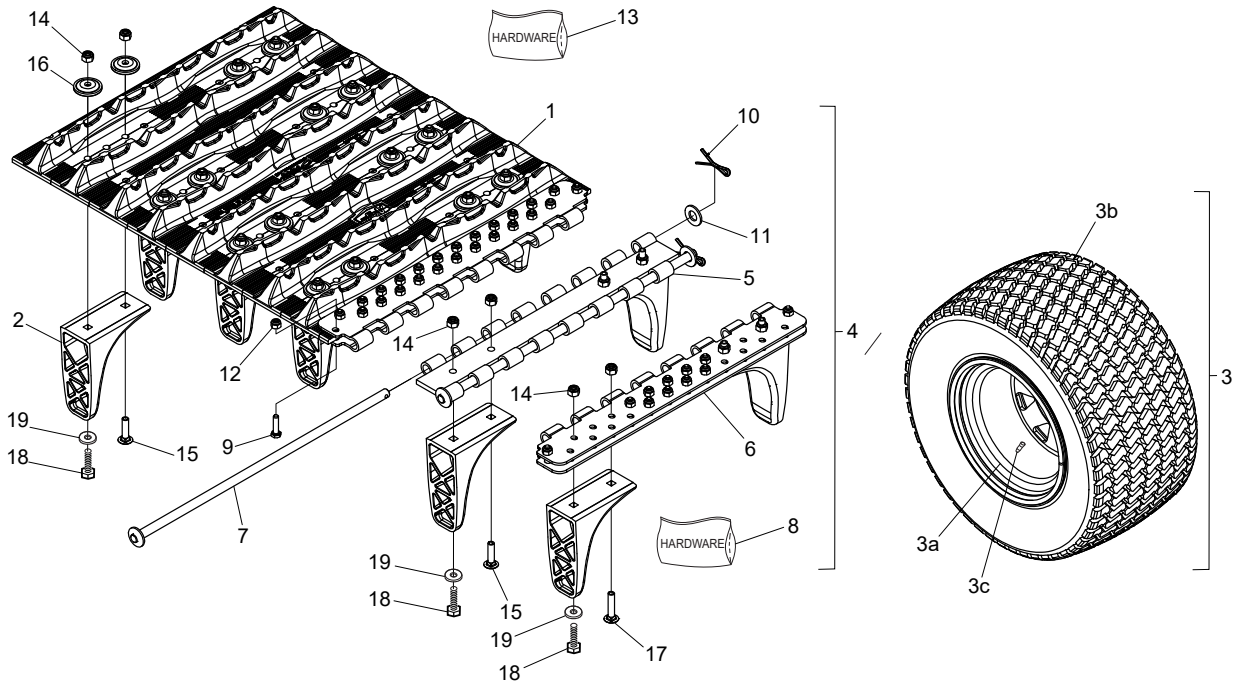

Also Available 958-88-4HD-NT (Kit without tires)
Do not install over Argo 25" tires.

Ref.	Qty.	Part #	Description
1	4	825-51-1	Track, Rubber - Argo
2	192	825-71	Guide, HD Track -UHMW-PE
3	8	127-215	Tire + Rim Ass'y - Multitrac XT HD (incl. Ref. 3a & 3b)
3a		127-281	Rim -12x9.5x2.25 Offset-Rein
3b		127-227	Tire, Multi-Trac XT 24x12-12
3c		125-26A	Valve, Tire - Unassembled
4	**1**	**958-92**	**Hinge Set & Extensions - HD, XT includes the following:**
5	4	849-241	Spacer, Track Lacing
6	4	849-302	Hinge, Track, HD
7	4	849-247	Rod, Hinge Ass'y
8	**1**	**958-91HDW**	**Hardware Kit, Hinge Set, Tracks HD, XT includes the following:**

Ref.	Qty.	Part #	Description
9	100	103-08	HHCS 1/4-20 x 1.0 Zn
10	4	104-71	Pin, Cotter 3/16 x 1.25 Zn
11	4	108-35	Washer .53 x 1.06 x .09 Zn
12	100	117-27	Locknut, Nylon 1/4-20 Zn
13	**1**	**958-88-4HD-HDW**	**Hardware Kit - Rubber Tracks - HD, XT includes the following:**
14	384	117-21	Locknut, Nylon 5/16-18"
15	192	112-155	Bolt, Carriage
16	384	108-110	Washer, Concave 5/16 ID x 1-3/8"
17	16	112-11	C/Bolt 5/16-18 x 1.5 Gr5 Zn
18	192	103-38	HHCS 5/16-18x1.25 Gr5 Zn
19	192	108-113	Washer .33x.88x.08 L9 Eco

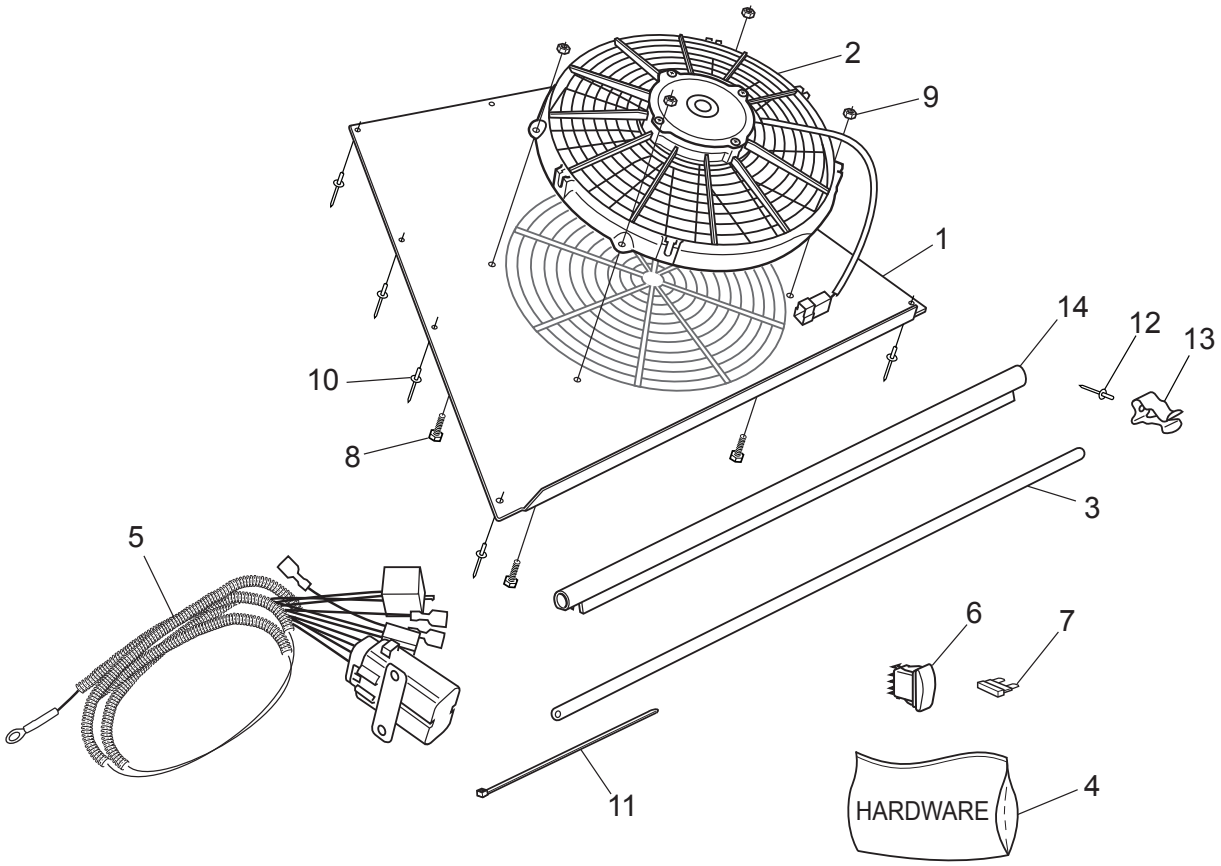

Ref.	Qty.	Part #	Description
1	1	952-261	Mount, Hood Fan II - XT
2	1	953-50	Fan, Hood - XT
3	1	955-103	Prop Rod, Hood
4	**1**	**958-89HDW**	**Hardware, Acc, Hood Fan - XT**
5	1	613-229	Wire Harness, Relay, Hood Fan
6	1	613-202	Switch, Hood Fan
7	1	118-77	Fuse, 20A Mini
8	4	112-04	HHCS 1/4-20 x 3/4 Gr5 Zn
9	4	117-82	Locknut, Flange 1/4-20 Zn
10	25	120-13	Rivet - 3/16 x 3/4 Black
11	2	100-64	Tie Wrap - 5.5" - Black
12	1	120-15	Rivet - 1/8 x 7/16
13	1	127-285	Retainer, Hood Prop
14	1	952-165	Seal, Hood Fan - XT
15	2	120-11	Rivet, 5/32 x .157-.472

958-90 Windshield

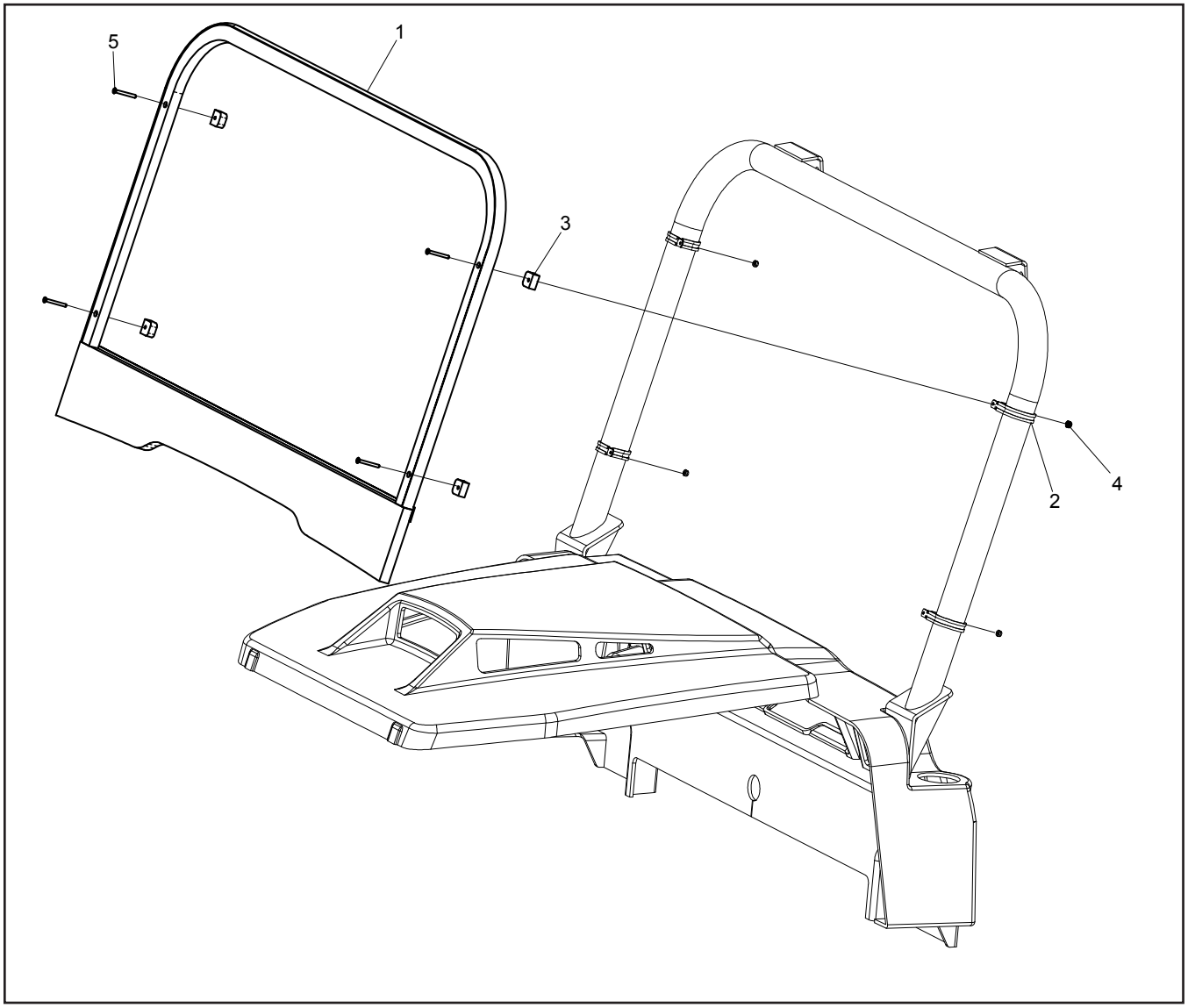

Ref.	Qty.	Part #	Description
1	1	958-90	Windshield Asm, XTI
2	4	127-240	Clamp, 2.0" Loop - Rubber Cush
3	4	958-94	Spacer, Windshield - XTI
4	4	117-10	Locknut, 10-24 N/I Zn
5	4	112-222	FHCS 10-24 x 1.75, Black

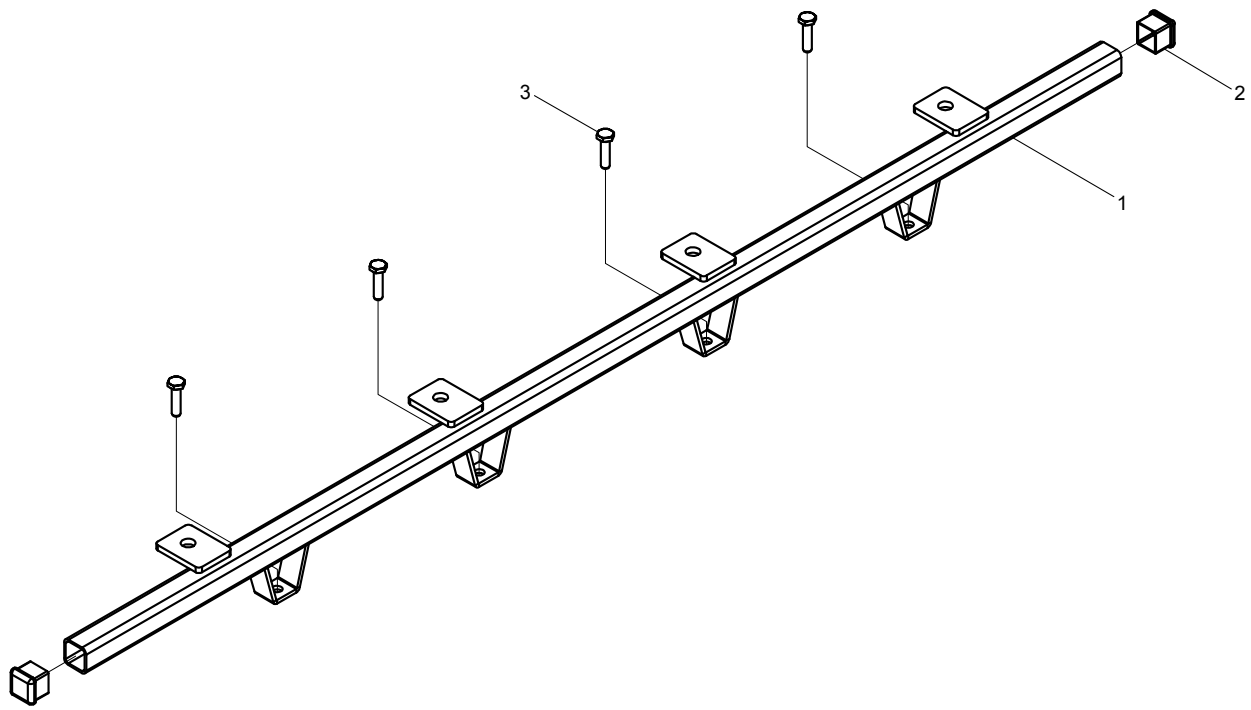

Ref.	Qty.	Part #	Description
1	1	958-96	Bar, Light
2	2	849-88	Plug, 7/8" Sq Tube
3	4	103-08	HHCS 1/4-20x1.0 Zn

958-93 Cat Walk Mudflap

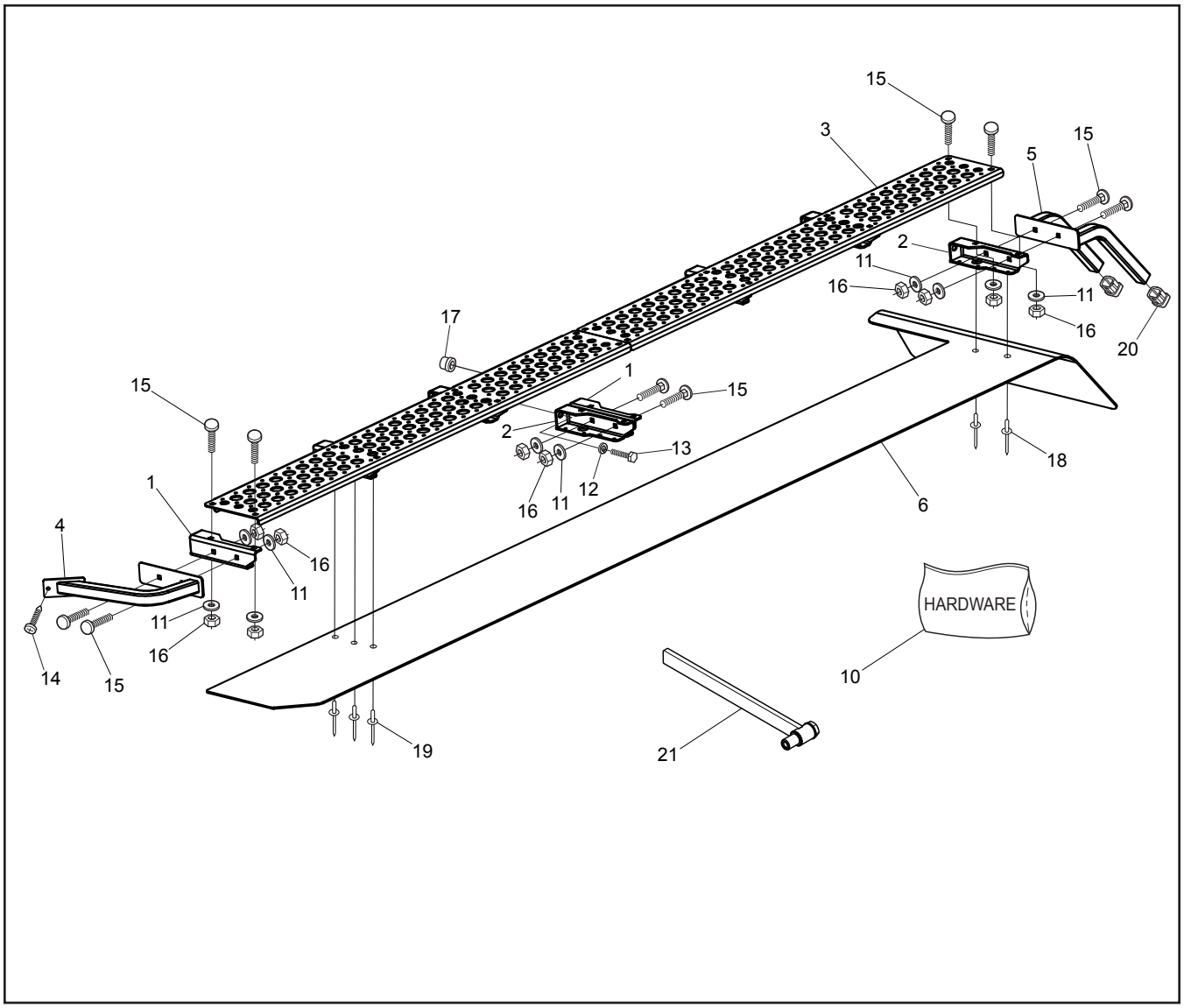

Ref.	Qty.	Part #	Description
1	8	952-205	Bracket, Supt Step LH
2	8	952-206	Bracket, Supt Step RH
3	4	952-207	Step, Platform
4	2	950-34	Tube Asm, Front Step
5	2	950-35	Tube Asm, Rear Step
6	1	951-19	Mudflap, Catwalk LH
7	1	951-20	Mudflap, Catwalk RH (not shown)
8	1	658-73	Tool, Expand M10 Rivet Nut
10	**1**	**958-93HDW**	**Hardware, Cat Walk Mudflap XT**
11	44	108-24	Washer .34x.70x.06 Zn
12	16	108-67	Lockwasher M10 Split-Ring Zn
13	16	112-93	HHCS M10x1,5x25mm
14	2	112-102	Screw, Self Drill 12-14 x 3/4"

Ref.	Qty.	Part #	Description
15	44	112-227	C/Bolt, 5/16-18x3/4 Gr5 Zn
16	44	117-21	Locknut, Nylon 5/16-18 Zn
17	16	117-70	Insert, M10x1.5-13.5mm OD
18	4	120-09	Rivet - 3/16 x 1.0 Black
19	76	120-31	Rivet, 3/16" x 1/4", Open End
20	4	127-282	Plug, 1" Sq. Tube
21	1	658-82	Tool Ass'y, Insert Installation (Opt.)

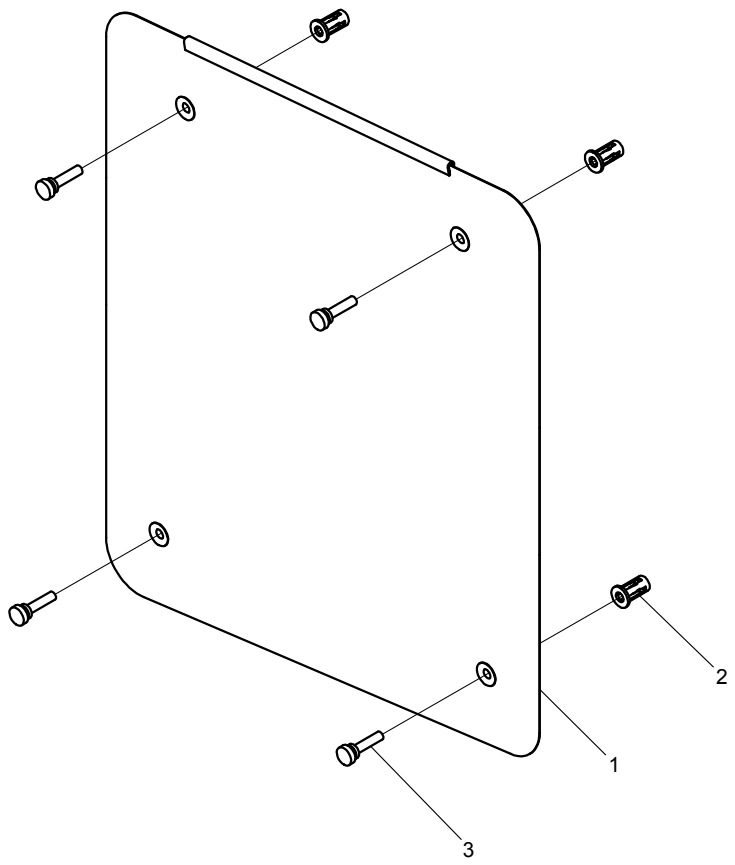

Ref.	Qty.	Part #	Description
1	1	707-53	Screen, Intake Debris, XT
2	4	117-53	Nut, Jack 1/4-20 8L-JNS Zn
3	4	117-89	Thumbscrew, 1/4-20X1, Nylon

958-102 Front Hard Roof

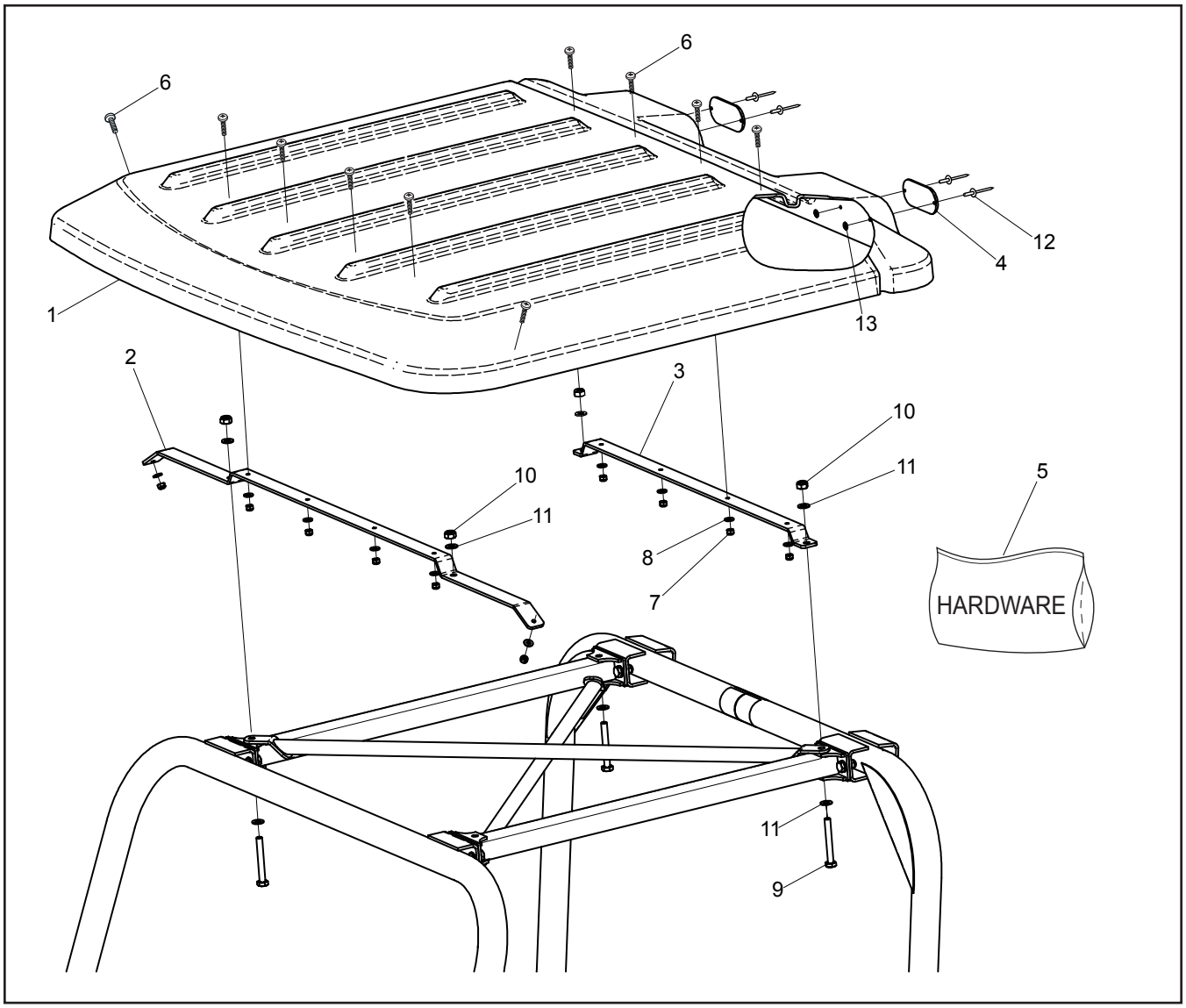

Ref.	Qty.	Part #	Description
1	1	958-103	Hard Top, Front - XT
2	1	958-106	Bracket, Front Mount - XT Hard Top
3	1	958-107	Bracket Rear Mount - XT Hard Top
4	2	127-01	Reflector, Red
5	**1**	**958-102HDW**	**Hardware, 2 Person Hard Top - XT**
6	10	103-73	THMS, Phil 1/4-20x.75 Zn
7	10	117-27	Locknut, Nylon 1/4-20 Zn
8	10	108-08	Washer .28x.62x.07 Zn
9	4	112-120	HHCS M10x1,5x80mm Zn
10	4	117-60	Locknut, Nyloc M10x1.5mm Zn 8
11	8	108-101	Washer, 0.41X0.79x0.08, Zn

Ref.	Qty.	Part #	Description
12	4	120-13	Rivet - 3/16 x 3/4 Black
13	4	120-05	Washer .19x.50x.04 Zn

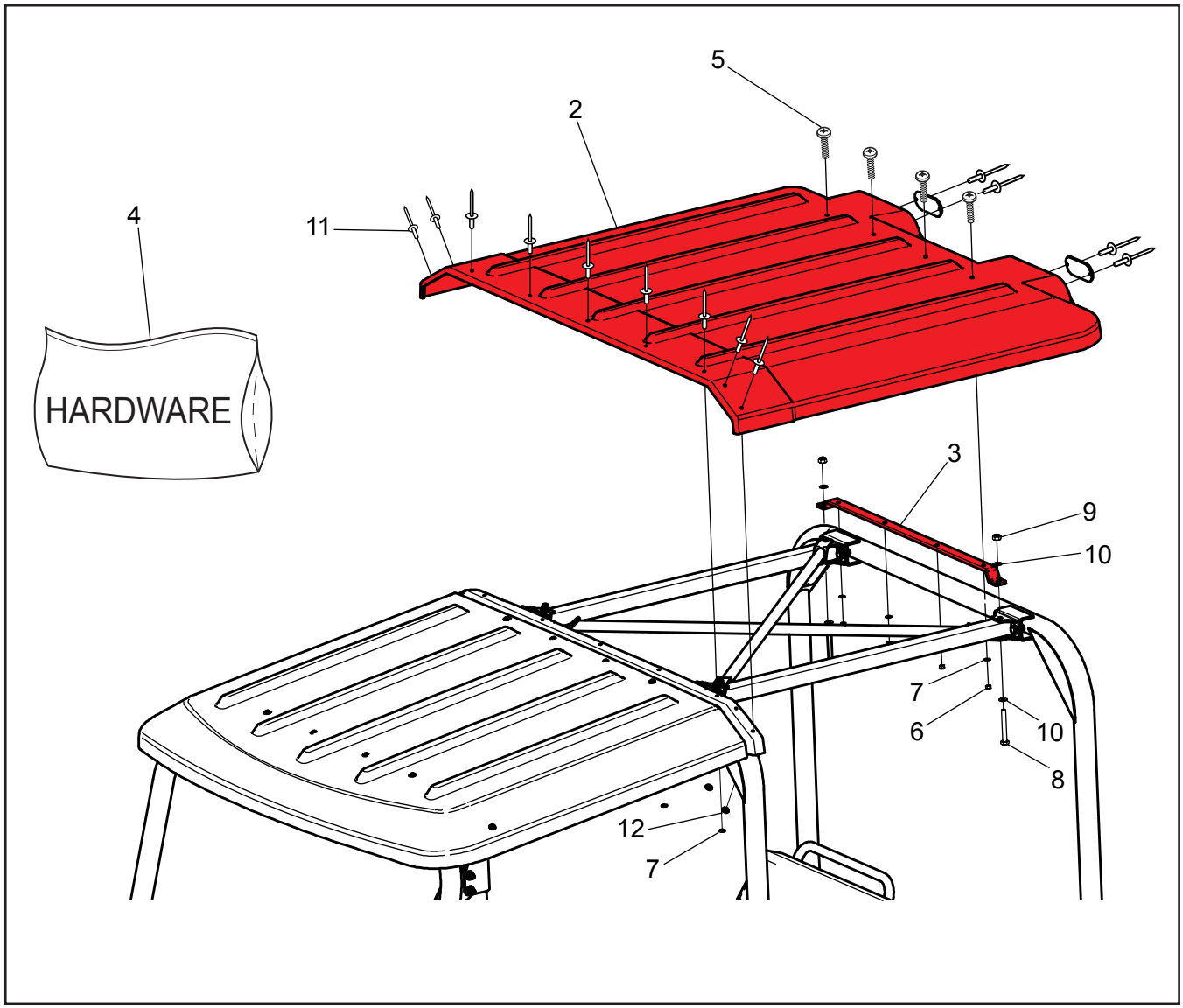

Ref.	Qty.	Part #	Description
1	1	958-102	Hard Top, 2 Person Acc - XT
2	1	958-105	Hard Top, Rear - XT
3	1	958-107	Brkt, Rr Mnt - XT Hard Top
4	**1**	**958-104HDW**	**Hardware, 4 Person Hard Top - XT includes:**
5	4	103-73	THMS, Phil 1/4-20x.75 Zn
6	4	117-27	Locknut, Nylon 1/4-20 Zn
7	4	108-08	Washer .28x.62x.07 Zn
8	2	112-120	HHCS M10x1,5x80mm Zn
9	2	117-60	Locknut, Nyloc M10x1.5mm Zn 8
10	4	108-101	Washer, 0.41x0.79x0.08, Zn

Ref.	Qty.	Part #	Description
11	10	120-13	Rivet - 3/16 x 3/4 Black
12	10	120-05	Washer .19x.50x.04 Zn

958-110 Two Person Canvas Enclosure

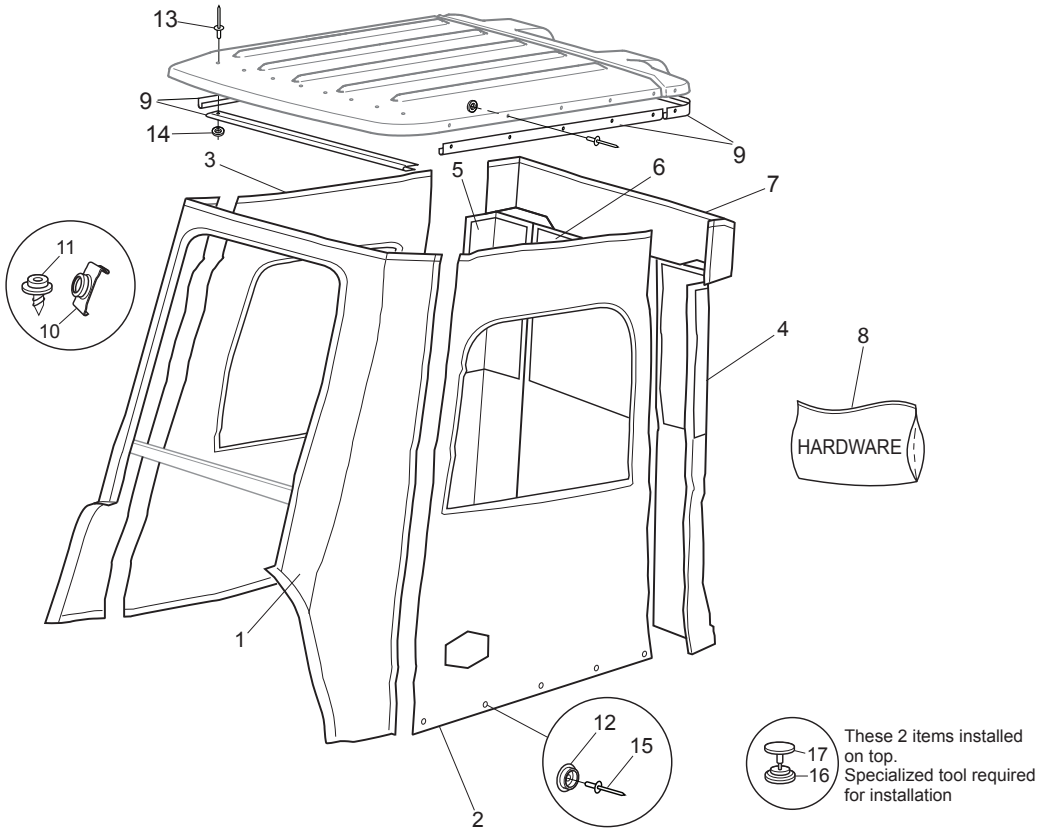

Ref.	Qty.	Part #	Description
1	1	958-132	Panel, Canvas - Windshield
2	1	958-133	Panel, Canvas - FR L Door
3	1	958-134	Panel, Canvas - FR R Door
4	1	958-135	Panel, Canvas - FR Quarter Panel L
5	1	958-136	Panel, Canvas - FR Quarter Panel R
6	1	958-137	Panel, Canvas - FR Tailgate
7	1	958-138	Panel, Canvas - FR Tailgate HDR
8	**1**	**958-110HDW**	**Hardware, 2 Person Canvas Enclosure - XT includes:**
9	3	958-145	Track, J Clip - 60"
10	11	627-02	Dome Snaps-Clip,Windshield

Ref.	Qty.	Part #	Description
11	16	627-10	Dome Stud #8 x 3/8" #688
12	12	958-144	Dome, Blank
13	30	120-11	Rivet, 5/32 x .157-.472
14	30	120-04	Washer .19x.50x.08 Zn
15	12	120-20	Rivet - 1/8 x 1/4
16	17	4003E	Socket Nickle Plated Brass
17	17	4002E	Finish Cap Black Finish Brass

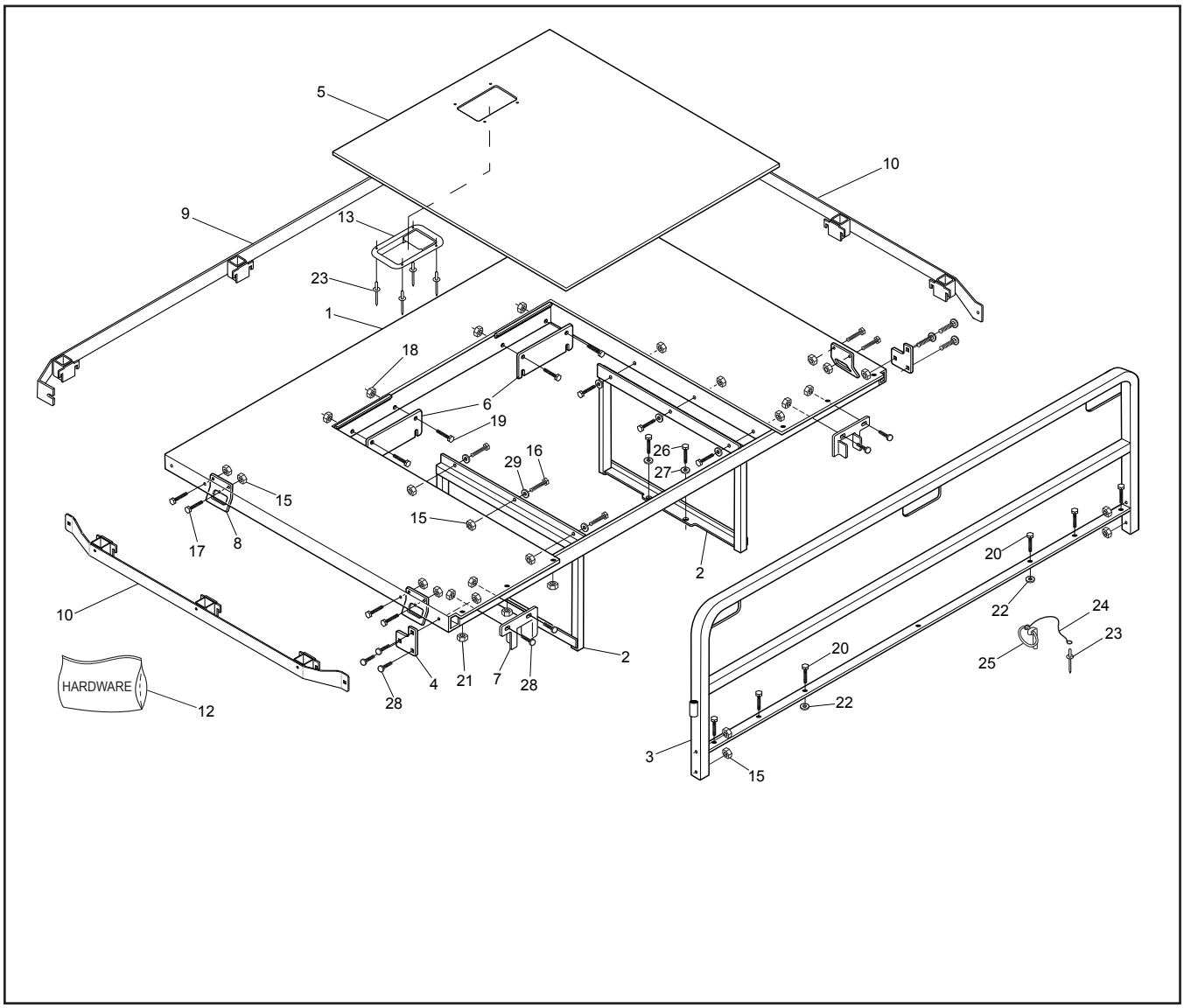

Ref.	Qty.	Part #	Description
1	1	950-26	Frame, Flat Bed
2	2	958-119	Support Leg Flat Bed
3	1	950-28	Headboard
4	2	958-122	Bracket, Headboard
5	1	950-27	Hatch, Assembly
6	2	958-109	Bracket, Rear Mount
7	2	958-111	Bracket, Hoop Clamp
8	4	958-113	Loop, Tie Down
9	1	958-114	Stake Pocket, Rear
10	2	958-121	Stake Pocket, Side
12	**1**	**958-112HDW**	**Hardware, Flat Bed Basic**
13	1	953-78	Latch, Paddle Slam, Flush Mount
14	2	112-11	C/Bolt 5/16-18 x 1.5 Gr5 Zn
15	12	117-21	Locknut, Nylon 5/16-18 Zn
16	6	103-57	HHCS 5/16-18x1.5 Gr5 Zn

Ref.	Qty.	Part #	Description
17	6	112-27	HHCS 5/16-18x1.75 Gr5 Zn
18	4	117-29	Locknut, Nylon 3/8-16
19	4	103-76	HHCS 3/8-16x1.75 Gr5 Zn
20	6	112-04	HHCS 1/4-20X3/4 Gr5 Zn
21	6	117-27	Locknut, Nylon 1/4-20 Zn
22	2	108-08	Washer .28x.62x.07 Zn
23	4	120-14	Rivet - 3/16 x 5/8 Black
24	1	622-125	Lanyard, Front Hitch EU
25	1	104-38	Pin, Hitch - 5/16 x 1.2"
26	4		Supplied with vehicle
27	4		Supplied with vehicle
28	22	103-112	C/Bolt 5/16-18x2.0 Gr5 Zn
29	6	108-76	Washer .33 x .59 x .06 Zn

958-115 Four Person Canvas Enclosure

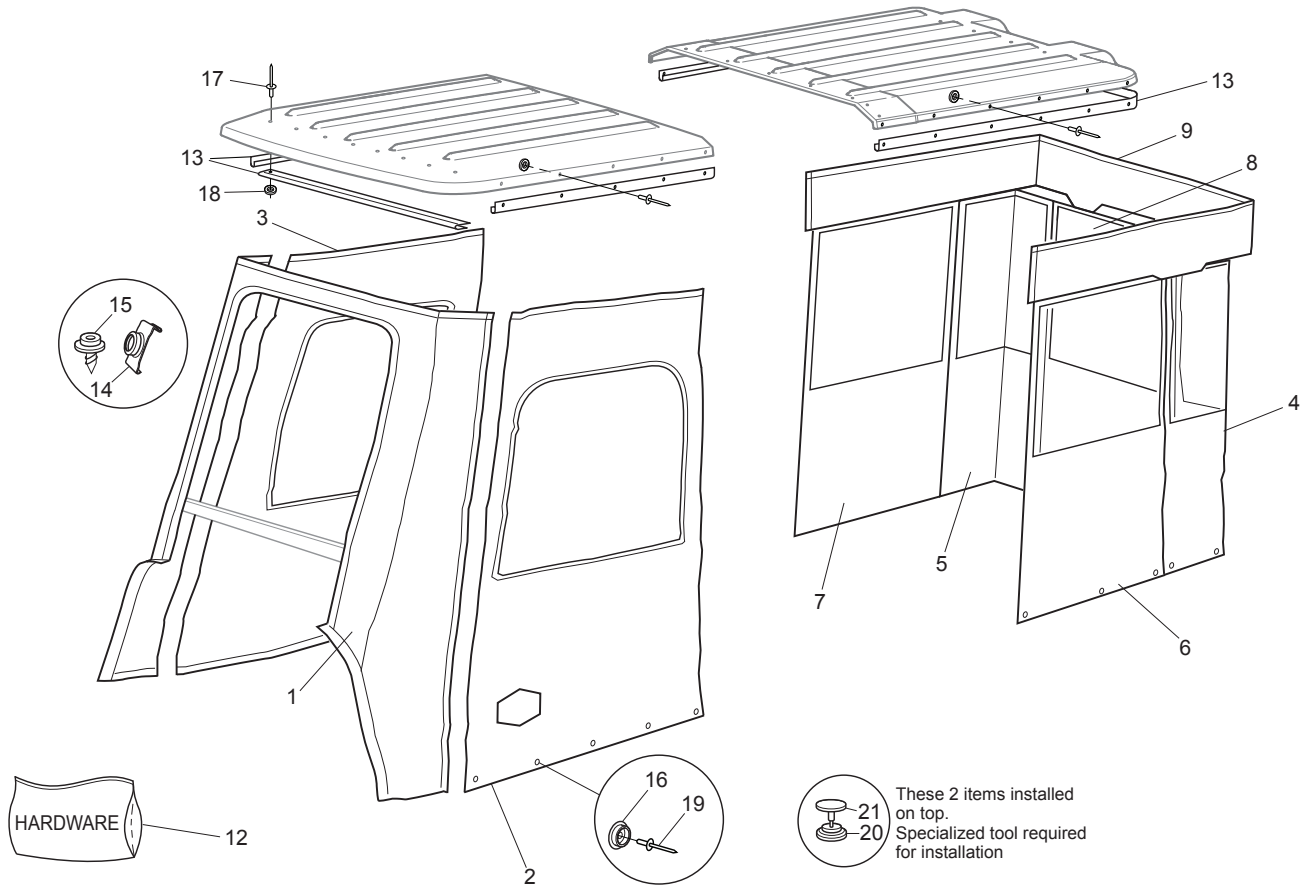

Ref.	Qty.	Part #	Description
1	1	958-132	Panel, Canvas - Windshield
2	1	958-133	Panel, Canvas - FR L Door
3	1	958-134	Panel, Canvas - FR R Door
4	1	958-139	Panel, Canvas - RR L Door
5	1	958-140	Panel, Canvas - RR R Door
6	1	958-141	Panel, Canvas - RR Center Panel L
7	1	958-142	Panel, Canvas - RR Center Panel R
8	1	958-143	Panel, Canvas - RR Tailgate
9	1	958-146	Panel, Canvas - RR Tailgate HDR

Ref.	Qty.	Part #	Description
12	**1**	**958-115HDW**	**Hardware, 4 Person Canvas Enclosure - XT includes:**
13	5	958-145	Track, J Clip - 60"
14	11	627-02	Dome Snaps-Clip,Windshield
15	12	627-10	Dome Stud #8 x 3/8" #688
16	32	958-144	Dome, Blank
17	42	120-11	Rivet, 5/32 x .157-.472
18	42	120-04	Washer .19x.50x.08 Zn
19	32	120-20	Rivet - 1/8 x 1/4
20	33	4003E	Socket Nickle Plated Brass (Snap Fastener)
21	33	4002E	Cap, Finish (Snap Fastener)

958-129 Heater Kit - XTI

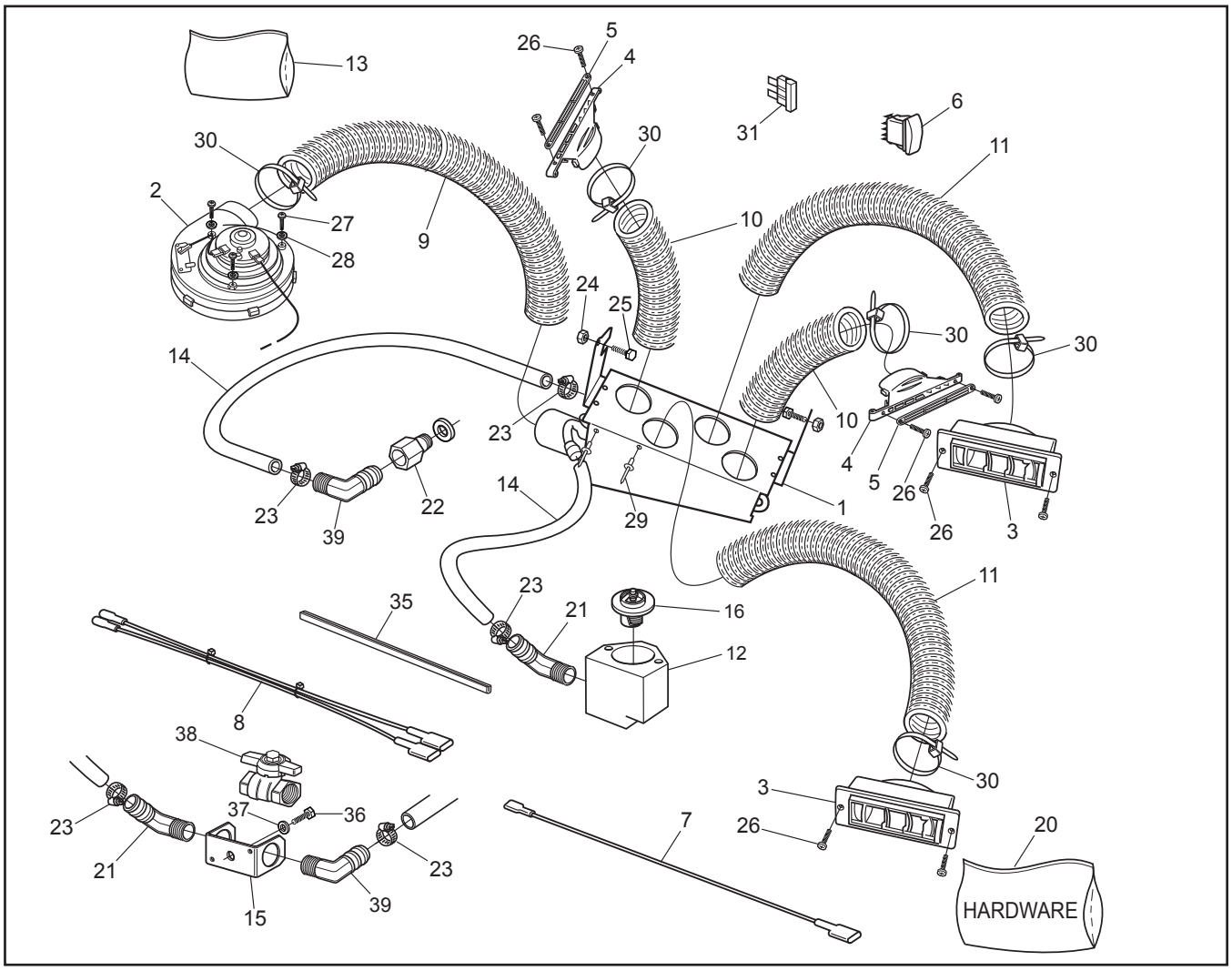

Ref.	Qty.	Part #	Description
1	1	958-127	Heater Box W/Core
2	1	953-56	Fan, Blower Heater
3	2	953-57	Louver, Heater Vent
4	2	953-58	Plenum, Defroster
5	2	953-59	Grill, Vent Defrost
6	1	613-157	Switch, Heater Fan
7	1	613-167	Ground Wire, Heater Switch
8	1	613-204	Wire Harness, Heater - XT
9	1	953-61	Hose, Inlet 3" x 24"
10	2	953-66	Hose, Duct Defrost 2.5"x12"
11	2	953-60	Hose, Heat 2.5" x 36"
12	1	848-106	Housing, Heater Kit Thermostat
13	1	848-107	Thermostat- Gasket & Fasteners (incl. Ref. 16)
14	2.75'	848-13RM	Hose, Heater - 5/8"IDx250' lg
15	1	848-114	Bracket, Shut Off Valve
16	1	66 453 03	205 Degree Thermostat & Gasket
20	**1**	**958-129HDW**	**HDW, Heater/Defroster - XT**
21	2	848-64	Barb, Hose 5/8x3/8NPTx45 Elbow

Ref.	Qty.	Part #	Description
22	1	848-174	Adapter, M12 x 1.25-3/8 FPT
23	4	638-16	Clamp, Gear 5/8" HF-10
24	2	117-27	Locknut, Nylon 1/4-20 Zn
25	2	112-04	HHCS 1/4-20x3/4 Gr5 Zn
26	8	103-24BL	OHPS T/S #6x1.0 Black Zn
27	3	103-48	T/S Pan HD Phil #10x5/8 A Blk
28	3	120-04	Washer .19x.50x.08 Zn
29	2	120-15	Rivet - 1/8 x 7/16
30	5	100-102	Tie Wrap - 14" - White - 50lb
31	1	118-49	Fuse, 15A 2-Prong (AT015)
32	1	952-218	Tool, Layout Defroster
33	1	952-219	Template, Defroster Location
34	1	952-220	Template, Heater Fan Install
35	1.5	601-107RM	Trim, Neoprene
36	1	112-96	HHCS M6x1x10mm Zn
37	1	108-03	Lockwasher 1/4 Split Ring Zn
38	1	848-113	Valve, Shutoff
39	3	848-31	Barb, Beaded Hose 90 Elbow

For 958-90 Fixed Windshield only. Will not work with 988-192 Fold Down Windshield.

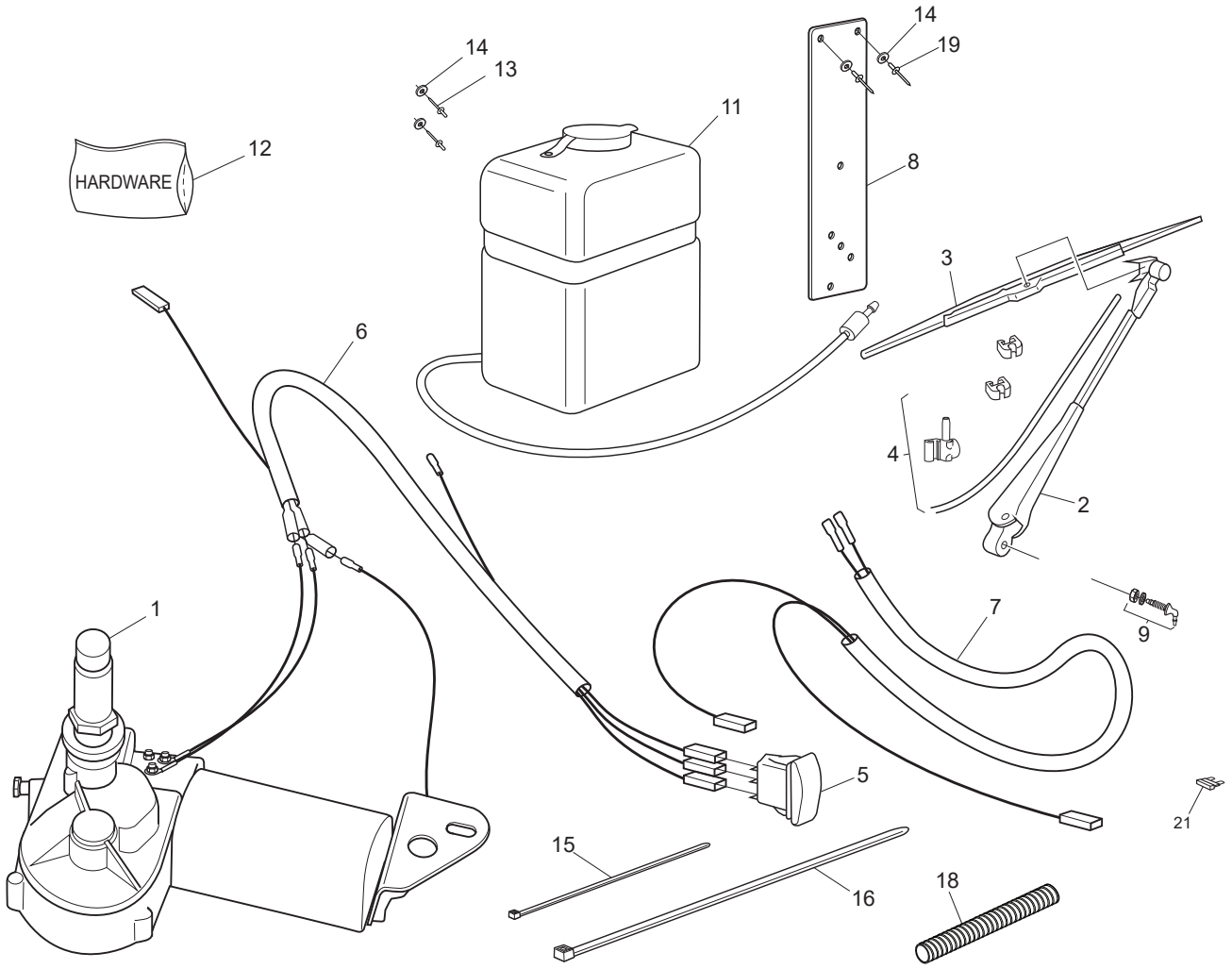

Ref.	Qty.	Part #	Description
1	1	953-62	Motor, Wiper 110 Degree 2 SP
2	1	849-268	Arm, Wiper Radial
3	1	849-269	Blade, Wiper 19"
4	1	10391C	Washer Kit, Wiper Arm
5	1	613-203	Switch, Wiper 1Spd W/Washer
6	1	613-205	Wire Harness, Wiper - XT
7	1	613-206	Wire Harness, Washer - XT
8	1	958-215	Bracket, Reservoir - XT
9	1	849-272	Fitting, Bulkhead 90 Degree
10	1	849-273	Hose, Washer 3/16"
11	1	849-274	Reservoir, Washer W/Pump
12	**1**	**958-130HDW**	**Hardware, Wiper Washer XTI**
13	2	120-13	Rivet - 3/16 X 3/4 Black
14	4	120-04	Washer .19x.50x.08 Zn

Ref.	Qty.	Part #	Description
15	6	100-64	Tie Wrap - 5.5" - Black
16	2	100-102	Tie Wrap - 14" - White - 50lb
17	3	118-75	Terminal, Male Bullet Red
18	.5	613-207-6	Loom, Nylon .25" ID
19	2	120-14	Rivet - 3/16 x 5/8 Black
20	1	103-48	T/S Pan Hd Phil #10x5/8 A Blk
21	1	118-49	Fuse, 15A 2-Prong (AT015)

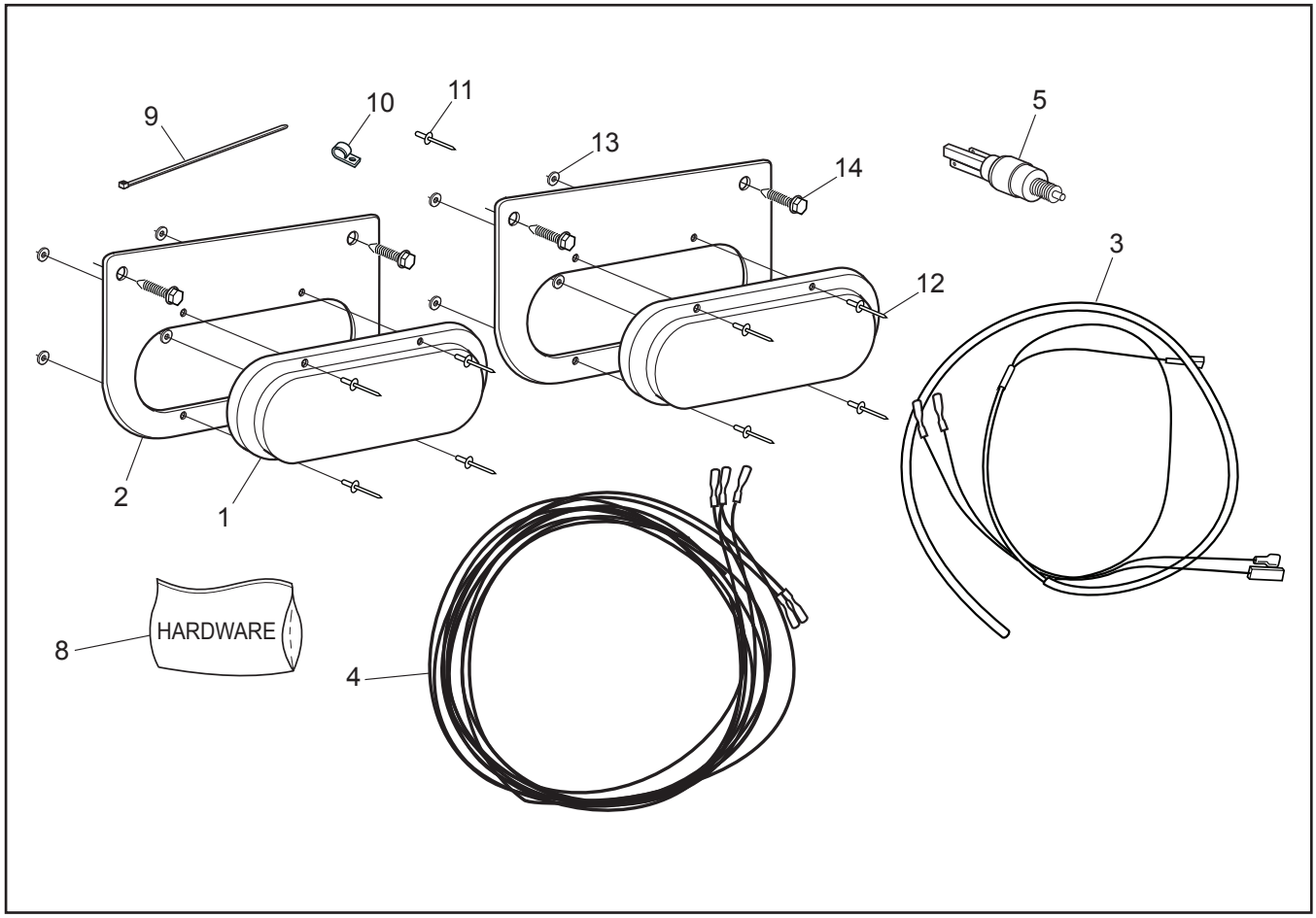

Ref.	Qty.	Part #	Description
1	2	613-208	Light, Brake/Tail LED Oval
2	2	952-221	Bracket, Brake Light Oval
3	1	624-28	Harness, Brake Light Switch XT
4	1	624-29	Wire Harness, Brake Light - XT
5	1	613-165	Switch, Brake Light - HDI
8	**1**	**958-147HDW**	**Tail & Brake Light Hardware**
9	6	100-64	Tie Wrap - 5.5" - Black
10	3	126-93	Clamp, Nylon Wire - 1/2" ID
11	3	120-13	Rivet - 3/16 x 3/4 Black
12	8	120-11	Rivet, 5/32 x .157-.472
13	8	108-28	Washer .156x.375x.047 Zn
14	4	112-102	Screw, Self Drill 12-14 x 3/4"
15	4	103-55	HHCS 5/16-18 x 2.75 Gr5 Zn
16	4	108-24	Washer .34 x .70 x .06 Zn
17	4	117-21	Locknut, Nylon 5/16-18 Zn

958-156 Heater Assembly-XT Diesel

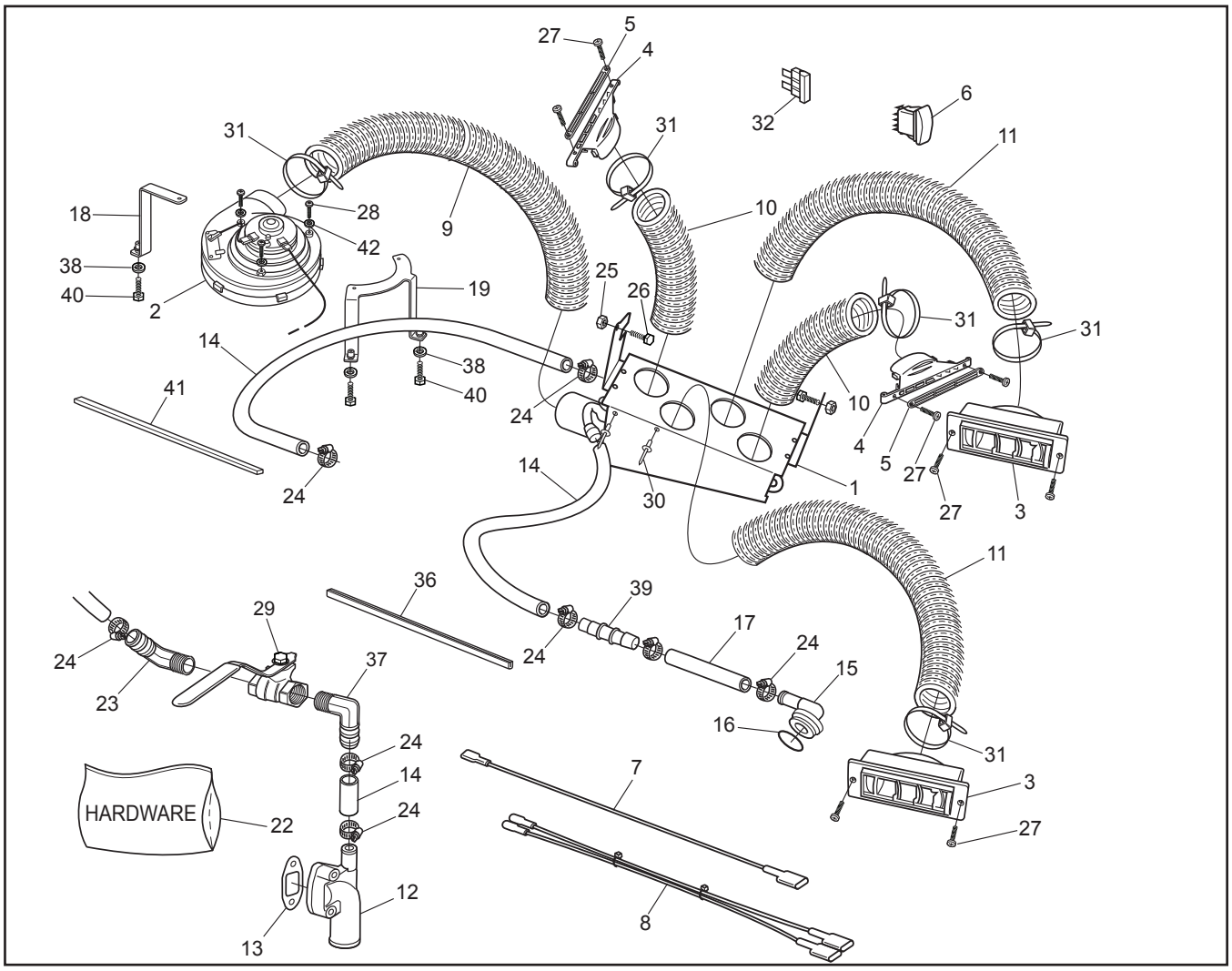

Ref.	Qty.	Part #	Description
1	1	958-127	Heater Box W/Core
2	1	953-56	Fan, Blower Heater
3	2	953-57	Louver, Heater Vent
4	2	953-58	Plenum, Defroster
5	2	953-59	Grill, Vent Defrost
6	1	613-157	Switch, Heater Fan
7	1	613-167	Ground Wire, Heater Switch
8	1	613-204	Wire Harness, Heater - XT
9	1	953-61	Hose, Inlet 3" x 24"
10	2	953-66	Hose, Duct Defrost 2.5" x 12"
11	2	953-60	Hose, Heat 2.5" x 36"
12	1	953-84	Heater Outlet Housing
13	1	953-85	Gasket, Outlet Housing
14	2.5	848-13RM	Hose, Heater - 5/8"ID x 250' lg
15	1	953-86	Fitting, Return Port
16	1	953-87	Gasket, Return Port
17	. 5	958-162	Hose, Heater 1/2" ID RM
18	1	952-243	Bracket, Fan Single XTD
19	1	952-244	Bracket, Fan Double XTD
22	**1**	**958-156HDW**	**HDW, Heater/Defroster - XT**
23	3	848-64	Barb, Hose 5/8 x 3/8NPT x 45 Elbow

Ref.	Qty.	Part #	Description
24	8	638-16	Clamp, Gear 5/8" HF-10
25	2	117-27	Locknut, Nylon 1/4-20 Zn
26	2	112-04	HHCS 1/4-20 x 3/4 Gr5 Zn
27	8	103-24BL	OHPS T/S #6 x 1.0 Black Zn
28	3	103-48	T/S Pan HD Phil #10 x 5/8 A Blk
29	1	848-113	Valve, Shutoff
30	2	120-15	Rivet - 1/8 x 7/16
31	5	100-102	Tie Wrap - 14" - White - 50lb
32	1	118-49	Fuse, 15A 2-Prong (AT015)
33	1	952-218	Tool, Layout Defroster
34	1	952-219	Template, Defroster Location
35	1	952-220	Template, Heater Fan Install
36	1.5	601-107RM	Trim, Neoprene
37	1	848-31	Barb, Beaded Hose 90 Elbow - NPT
38	3	108-03	Lockwasher 1/4 Split Ring Zn
39	1	958-163	Fitting, Reducer 5/8 -1/2 Barb
40	3	112-220	HHCS M6x1x20mm Gr8.8 Zn
41	1.3	126-60	Vinyl Strip 1/2"x1/4"
42	3	120-04	Washer .19 x .50 x .08 Zn

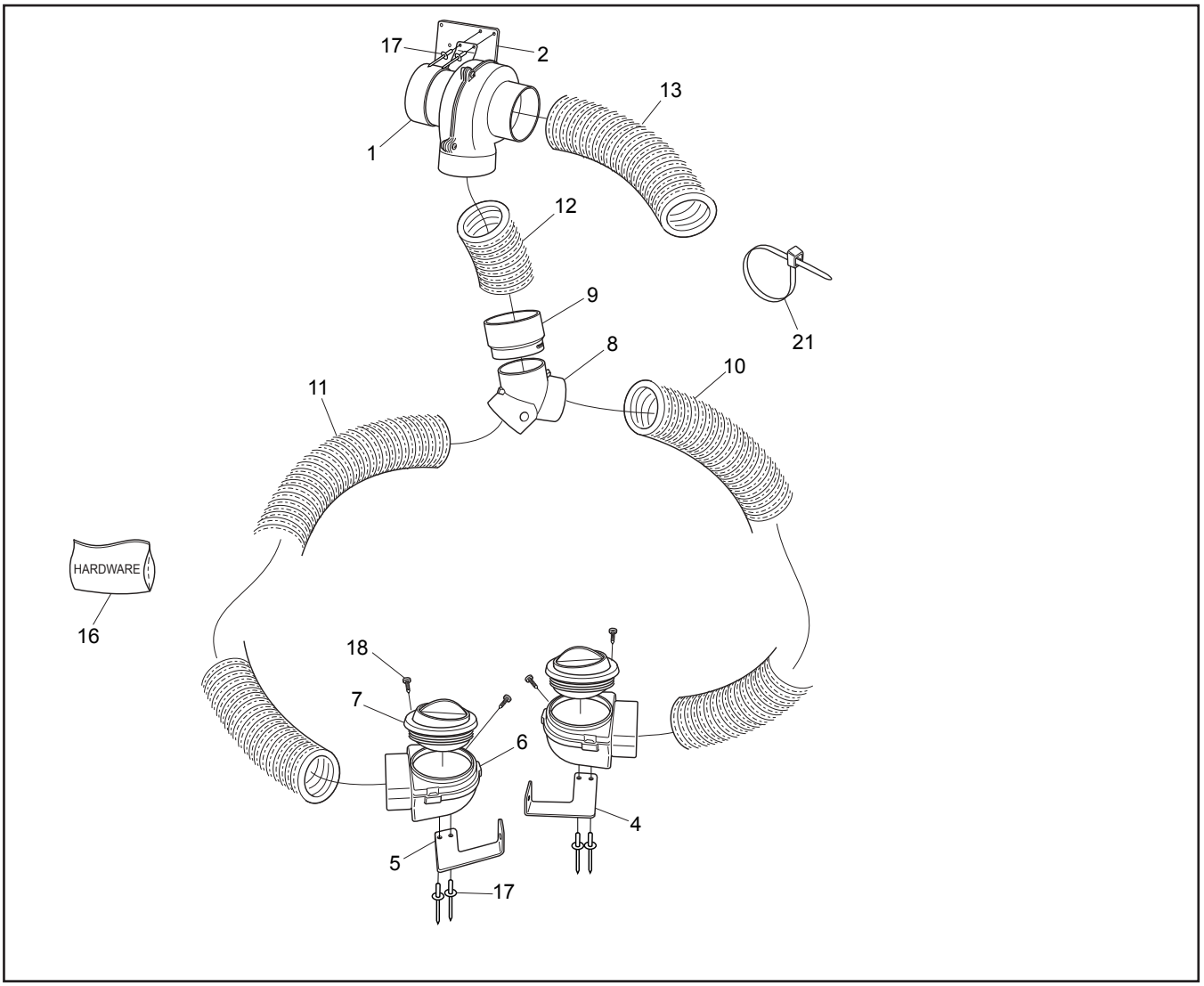

Ref.	Qty.	Part #	Description
1	1	127-184	Blower Fan c/w Mtg Bracket
2	1	952-247	Bracket, Fan Brake Cooling
3	1	613-221	Wire Harness, Brake Cooling XT
4	1	952-246	Bracket, Cooling Duct LH
5	1	952-248	Bracket, Cooling Duct RH
6	2	864-06	Duct, Brake Cooling
7	2	864-07	Louver, Brake Cooling
8	1	864-04	Fitting, 2.5" Hose Y
9	1	864-05	Fitting, Hose Reducer 3" -2.5"
10	1	864-08	Hose, Brake 2.5" x 24"
11	1	864-09	Hose, Brake 2.5" x 48"
12	1	864-10	Hose, Brake 3" x 6"
13	1	864-12	Hose, Brake 3" x 48"

Ref.	Qty.	Part #	Description
16	**1**	**958-157HDW**	**Hardware, Service Brake Cooling XT**
17	12	120-14	Rivet - 3/16 x 5/8 Black
18	4	112-139	OHPS T/S #4X5/8 Black Zn
19	1	118-02	Terminal, Male - #76-1251
20	1	118-03	Terminal, Female - #76-1289
21	9	100-102	Tie Wrap - 14" - White - 50lb

958-165 Brushguard XT

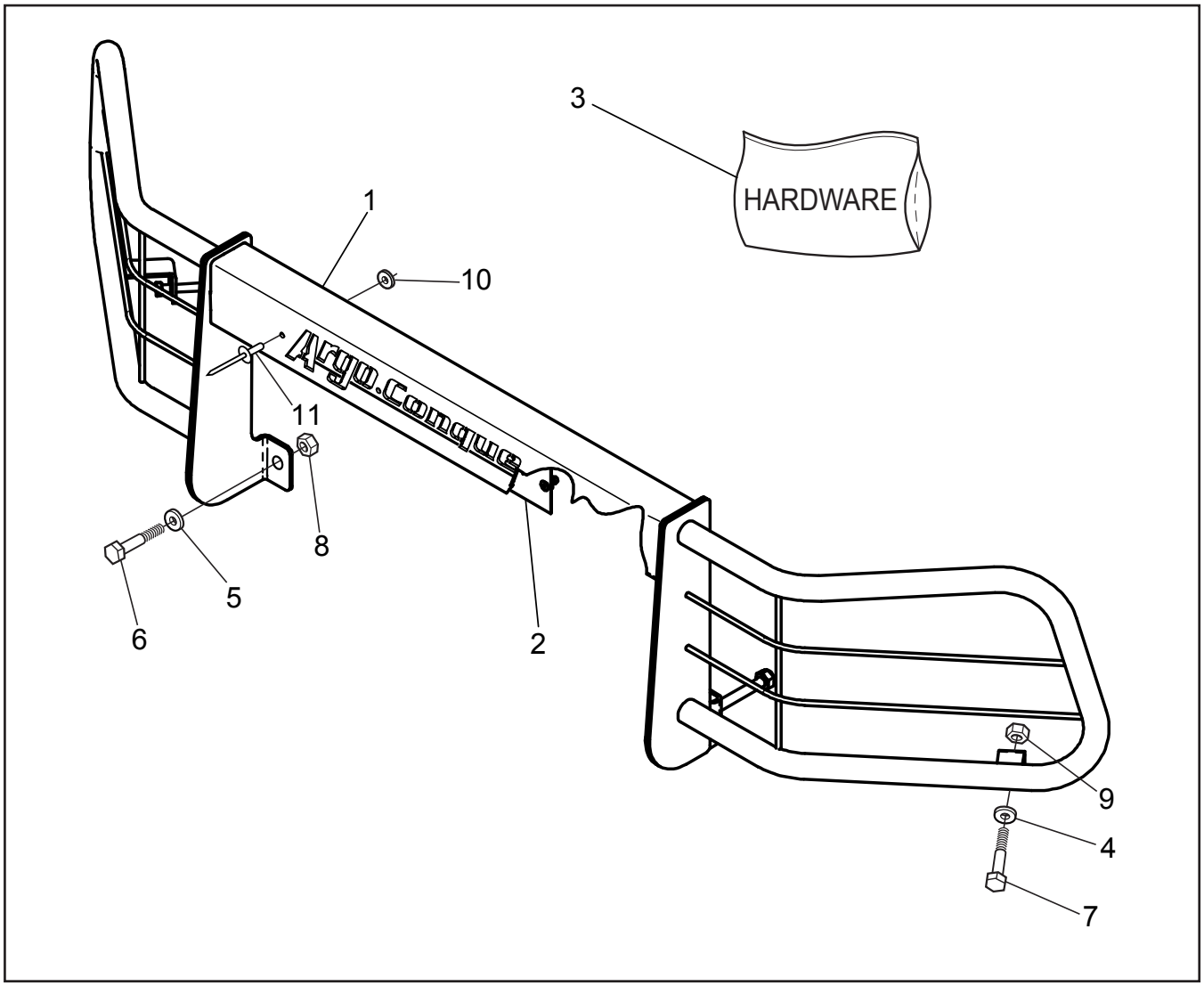

Ref.	Qty.	Part #	Description
1	1	958-158	Brushguard, One Piece - XT
2	1	958-128	Plate, Name Backer
3	**1**	**958-01HDW**	**Brushguard Hardware, XTI**
4	2	108-12	Washer .34x1.00x.06 Zn
5	2	108-26	Washer .43x1.02x.09 Zn
6	2	112-142	HHCS M10x1,5x80mm Zn Full Thrd
7	2	112-167	HHCS M8x1,25x80mm Zn
8	2	117-60	Locknut, Nyloc M10x1.5mm Zn8
9	2	117-77	Locknut, Nylon - M8x1,25mm Zn
10	3	120-04	Washer .19x.50x.08 Zn

Ref.	Qty.	Part #	Description
11	3	120-14	Rivet - 3/16 x 5/8 Black

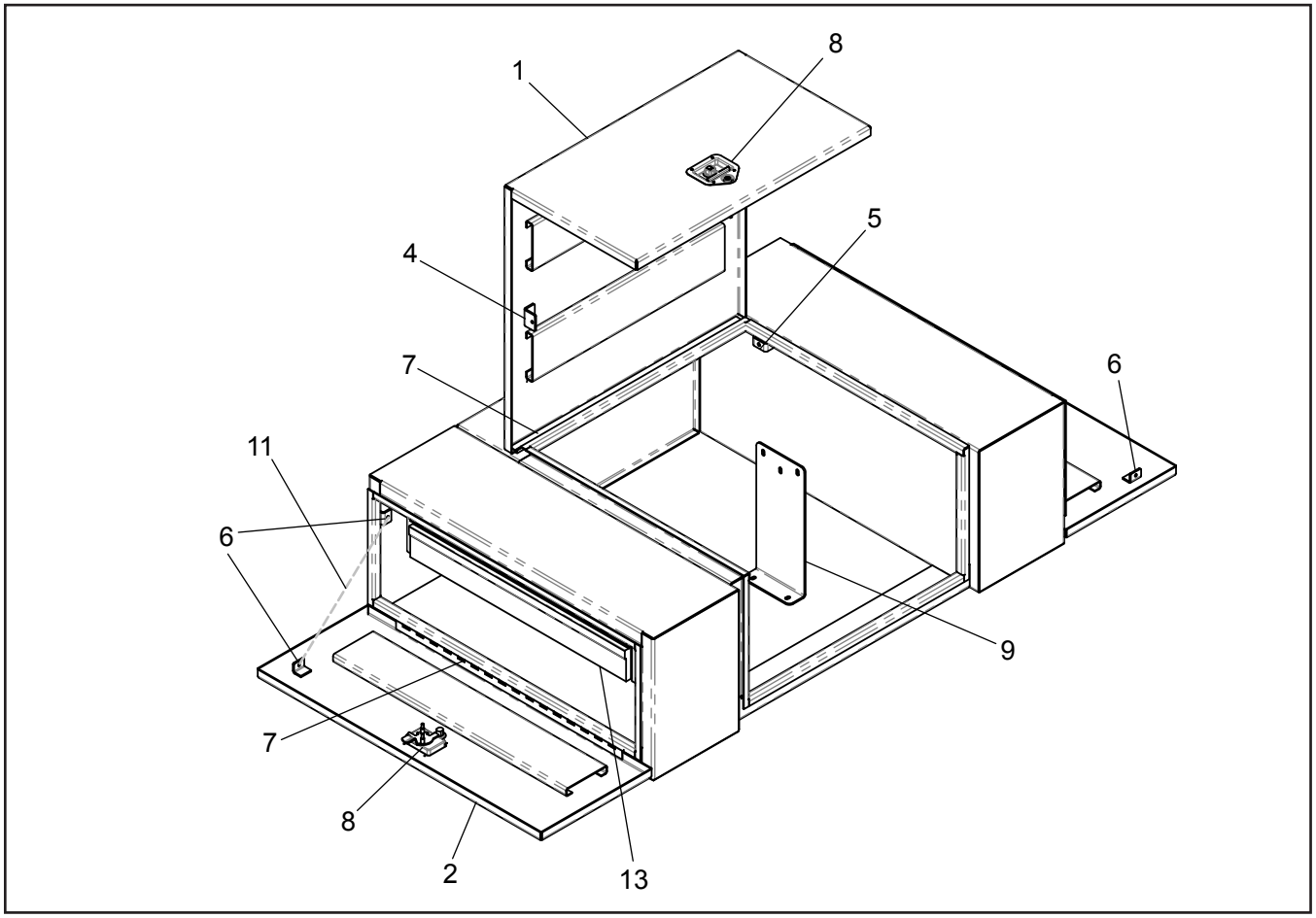

Ref.	Qty.	Part #	Description
1	1	WB-L005	Top Lid
2	2	WB-S003	Side Door
3	1	WB-001	Shelf
4	2	WB-002	Lid Top Gas Shock Bracket
5	2	WB-003	Lid Side Gas Shock Bracket
6	4	WIL-4040	Chain Holder Bracket
7	3	7510071	Piano Hinge
8	3	21509	Teardrop Lock
9	1	WB-004	Mounting Bracket & Hardware
10	1	WB-005	Hoop Clamp Bracket & Hardware
11	2	45071	Door Chain
12	2	NSK725V90M	18.5" Gas Shock
13	1	958-169	Optional Drawer

958-171 Convertible Top - 4 Person

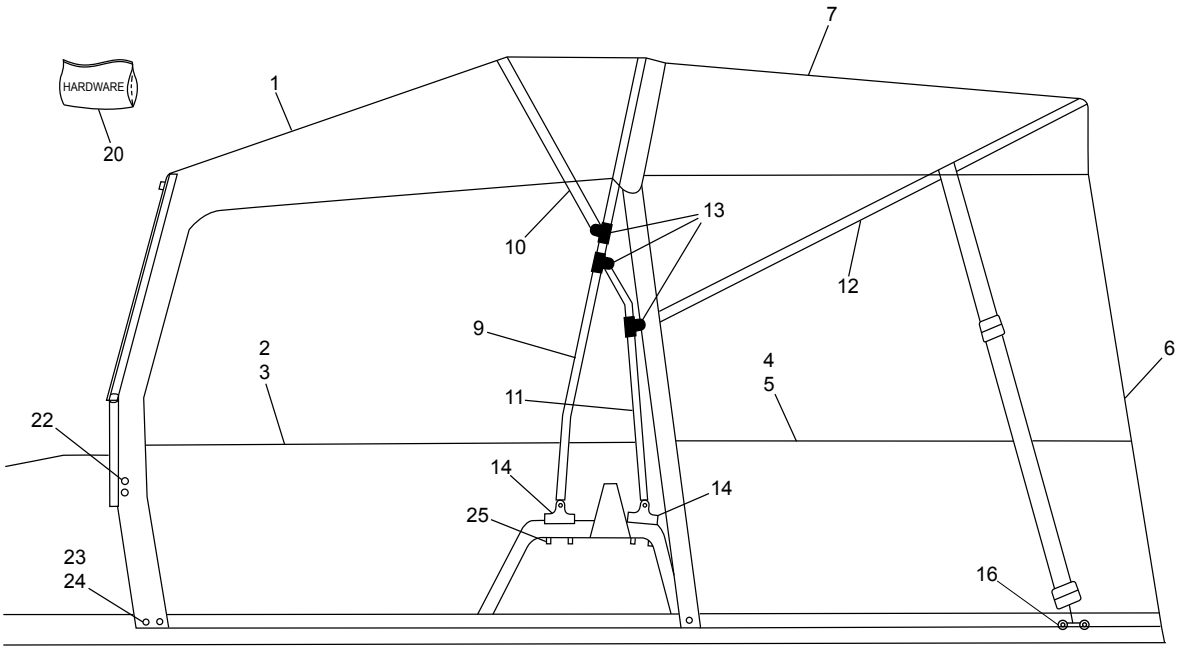

Ref.	Qty.	Part #	Description
1	1	958-173	Panel, Canvas - Front Roof
2	1	958-174	Panel, Canvas - RH FR Door
3	1	958-175	Panel, Canvas - LH FR Door
4	1	958-177	Panel, Canvas - RH RR Door
5	1	958-178	Panel, Canvas - LH RR Door
6	1	958-179	Panel, Canvas - 4P RR Window
7	1	958-180	Panel, Canvas - Rear Roof
8	1	958-182	Boot, Canvas - 4 Person
9	1	958-183	Frame, Main Pole
10	1	958-184	Frame, Front Roof Supt Pole
11	2	958-185	Frame, Main Pole Supt

Ref.	Qty.	Part #	Description
12	1	958-186	Frame, Rear Roof Supt Pole
13	3	958-187	Jaw Slide W/ Fasteners
14	4	958-188	Brkt, Nyl Convex Straight Tapped
15	2	958-189	Brkt, Nyl Convex Curved Drilled
16	2	958-190	Brkt, Stl Flat Straight Tapped
20	**1**	**958-171HDW**	**XT Canv Encl - 4 Person Hardware**
21	25	627-02	Dome Snaps Clip,Windshield
22	4	627-10	Dome Stud #8 x 3/8" #688
23	45	958-144	Dome, Blank
24	45	120-20	Rivet - 1/8 x 1/4
25	12	112-102	Screw, Self Drill 12-14 x 3/4"

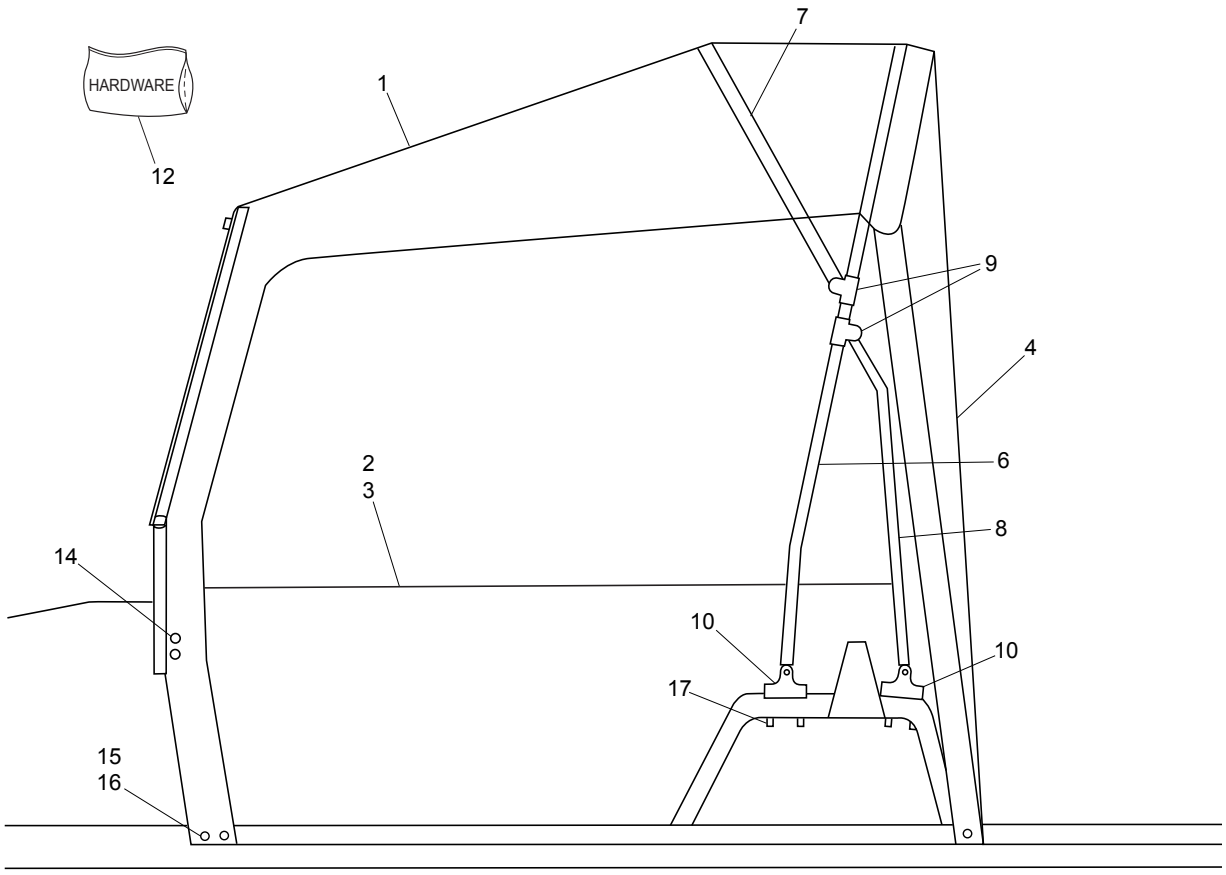

Ref.	Qty.	Part #	Description
1	1	958-173	Panel, Canvas - Front Roof
2	1	958-174	Panel, Canvas - RH FR Door
3	1	958-175	Panel, Canvas - LH FR Door
4	1	958-176	Panel, Canvas - 2P RR Window
5	1	958-181	Boot, Canvas - 2 Person
6	1	958-183	Frame, Main Pole
7	1	958-184	Frame, Front Roof Support Pole
8	2	958-185	Frame, Main Pole Support
9	3	958-187	Jaw Slide W/ Fasteners
10	4	958-188	Bracket, Nylon Convex Straight Tapped

Ref.	Qty.	Part #	Description
12	**1**	**958-191HDW**	**XT Canv Encl - 2 Person Hardware**
13	25	627-02	Dome Snaps-Clip, Windshield
14	4	627-10	Dome Stud #8 x 3/8" #688
15	30	958-144	Dome, Blank
16	30	120-20	Rivet - 1/8 x 1/4
17	12	112-102	Screw, Self Drill 12-14x3/4"

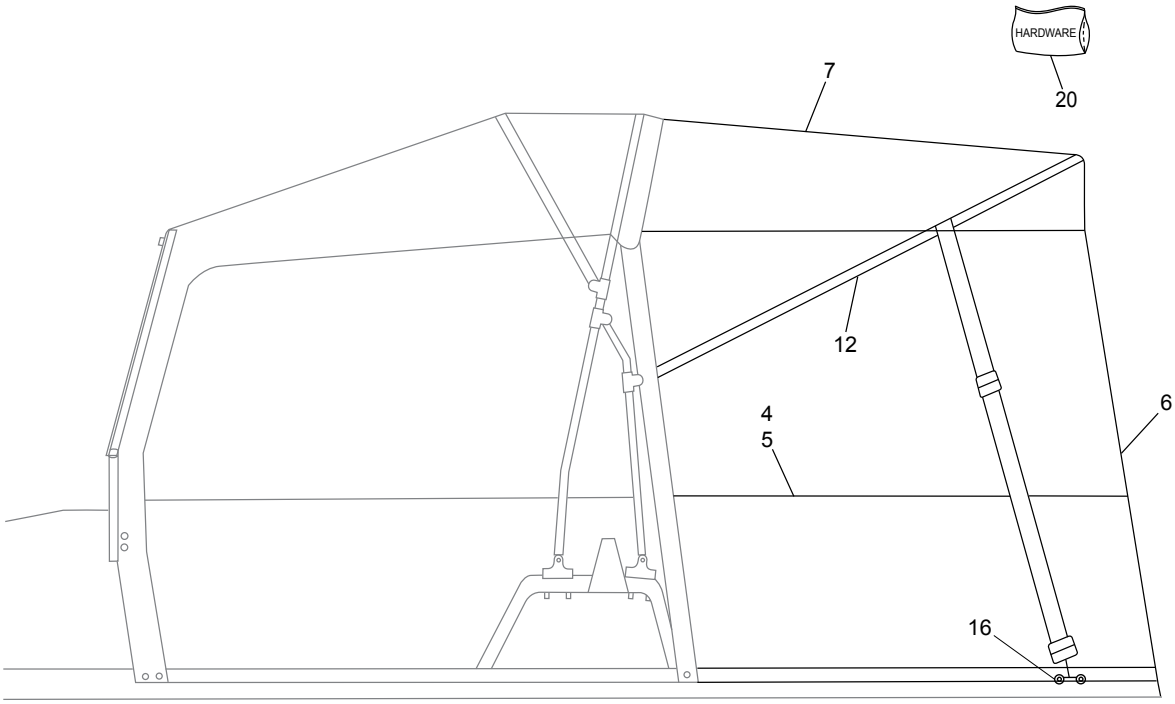

Ref.	Qty.	Part #	Description
4	1	958-177	Panel, Canvas - RH RR Door
5	1	958-178	Panel, Canvas - LH RR Door
6	1	958-179	Panel, Canvas - 4P RR Window
7	1	958-180	Panel, Canvas - Rear Roof
8	1	958-182	Boot, Canvas - 4 Person
12	1	958-186	Frame, Rear Roof Supt Pole
16	2	958-190	Brkt, Stl Flat Straight Tapped
20	**1**	**958-172HDW**	**Soft Canv Encl - 2 to 4 Conv. Hardware**
23	21	958-144	Dome, Blank
24	21	120-20	Rivet - 1/8 x 1/4
25	4	112-102	Screw, Self Drill 12-14 x 3/4"

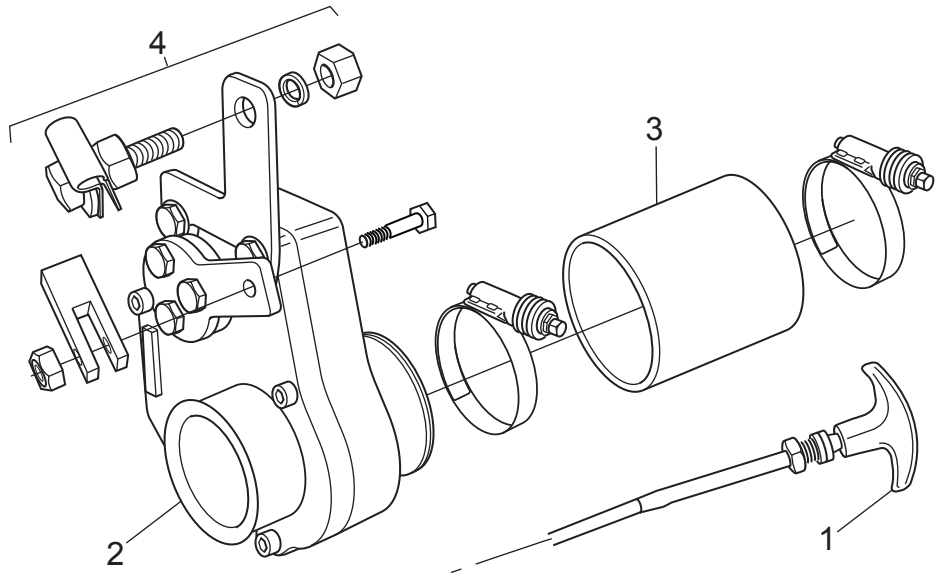

Ref.	Qty.	Part #	Description
1	1	958-201	Cable, Emergency Shutoff
2	1	958-202	Valve, Air Shutoff
3	1	958-203	Hose, Shutoff W/Clamps
4	1	958-204	Hardware, Shutoff Activation

958-192 Folding Windshield

IMPORTANT: This windshield is only compatible with the 958-305 Outfitter or 958-171 Conquest/XT Canvas Convertible Top option. It is not compatible with 956-15 Front ROPS option. Vehicles equipped with the front ROPS option must use the 958-90 Windshield - Fixed

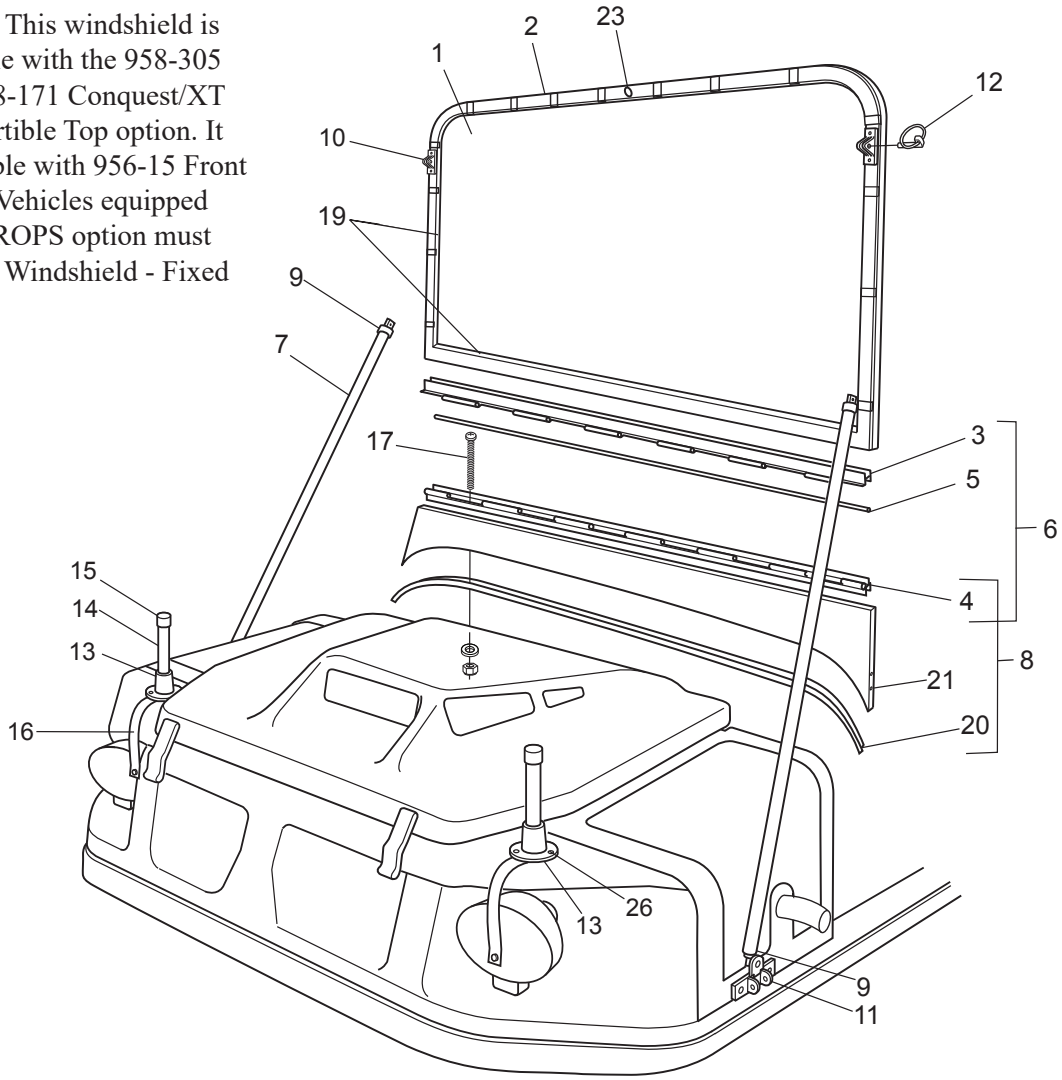

Ref.	Qty.	Part #	Description
1	1	002905-1C-XT	Acrylic, For 958-192 Windshield
2	1	002905-2B-XT	Top Bar - Black
3	1	002905-3B-XT	Hinge, Top - Black
4	1	002905-3A-B-XT	Hinge, Bottom+Gasket Inside
5	1	002904-3B-B-XT	Rod, Aluminium
6	1	002905-4B-XT	Hinge Set, Complete-Black (#3, 4 & 5)
7	2	002904-5B	Arm, Support (Black)
8	1	002905-6B-XT	Acrylic Base, Gasket and Bottom Hinge (#4 & 20)
9	4	002904-7B	Socket Ends & Gasket (Black)
10	2	002904-8A-B	Deck Brackets, Angled
11	2	002904-8C-B-180	Deck Bracket W/Screw 180 Deg.
12	2	627-03	Quik Pin 0269167

Ref.	Qty.	Part #	Description
13	2	002904-10B	Round Base Black
14	2	002904-11B-XT	Tube, Black
15	2	002904-12C	Cap, Black (Rubber)
16	2	002904-13B	Strap (Black)
17	2	002905-14A-XT	Bolt, SS 3.0 + Washer + Nut
18	2	002905-14B-XT	Bolt, SS 4.0 + Washer + Nut
19	1	002904-15-XT	Gasket, XT - Around Glass
20	1	002905-16-XT	Gasket, XT - Windshield to Body
21	5	002904-17	PHD Screw #8 1.25"
22	11	002904-18	PHD Screw #8 .75"
23	1	002904-19	Cap, Black (PVC) Wiper Hole
24	2	0029-20-XT	Retainer, Support Arm
25	6	2904-14A	Jack Nut same as 117-53 Nut, Jack 1/4-20 8L-JNS Zn
26	6	112-102	Screw, Self Drill 12-14 x 3/4"

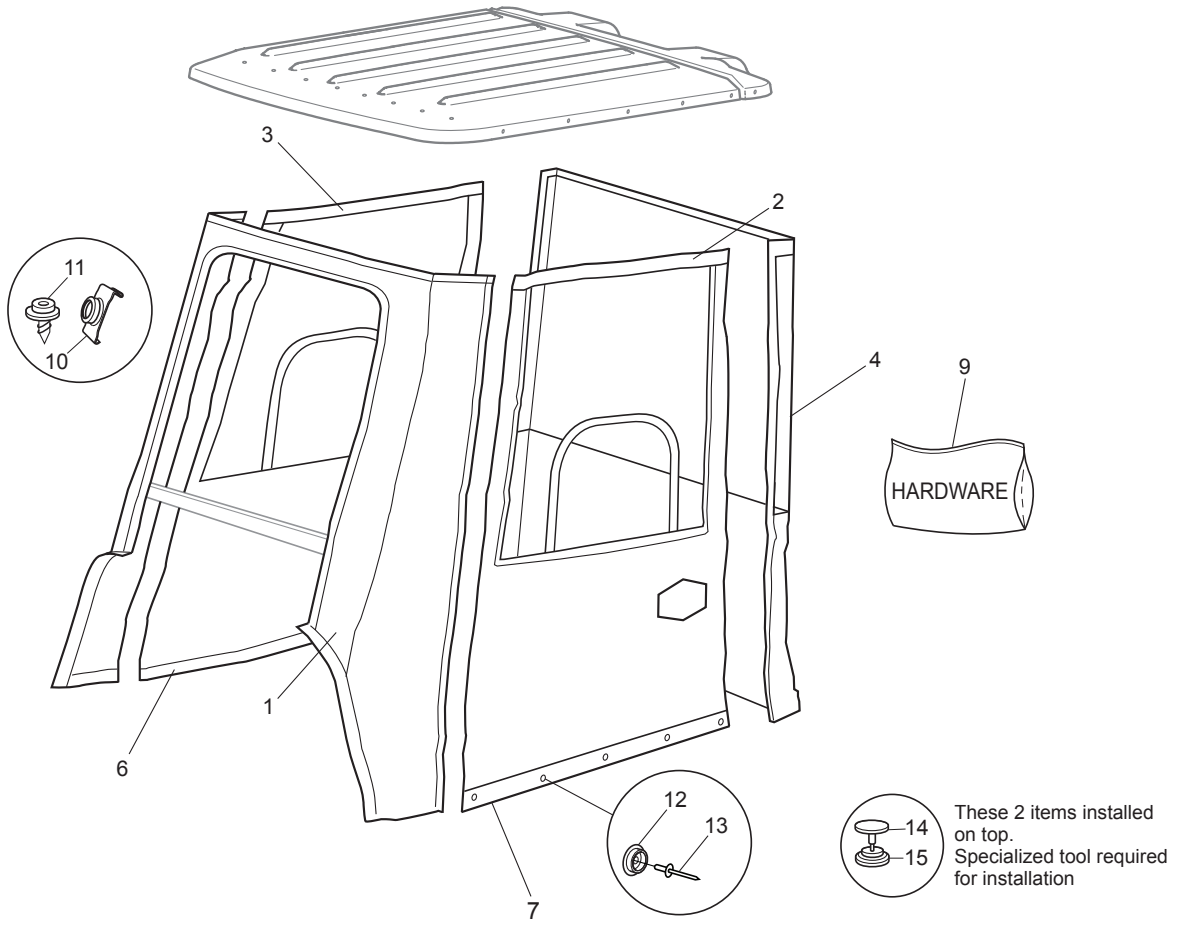

Ref.	Qty.	Part #	Description
1	1	958-206	Mlding, Front W/S - Bl Canvas
2	1	958-207	Panel, LH - Bl Canvas
3	1	958-208	Panel, RH - Bl Canvas
4	1	958-209	Panel, RR W/Window - Bl Canvas
5	1	958-212	Pouch, Parts - Bl Canvas
6	1	958-211	Mlding, RH Bot - Bl Canvas
7	1	958-210	Mlding, LH Bot - Bl Canvas
9	**1**	**958-205HDW**	**Acc, 2 Person Encl - XT Hardware**
10	13	627-02	Dome Snaps-Clip,Windshield
11	8	627-10	Dome Stud #8 x 3/8" #688
12	32	958-144	Dome, Blank
13	32	120-20	Rivet - 1/8 x 1/4

Ref.	Qty.	Part #	Description
14	32	958-214	Cap, Dome - Long Post
15	32	958-213	Dome, Blank - Locking
16	24	120-33	Rivet, 1/8 x 1/2 Black

958-216 Four Person Enclosure

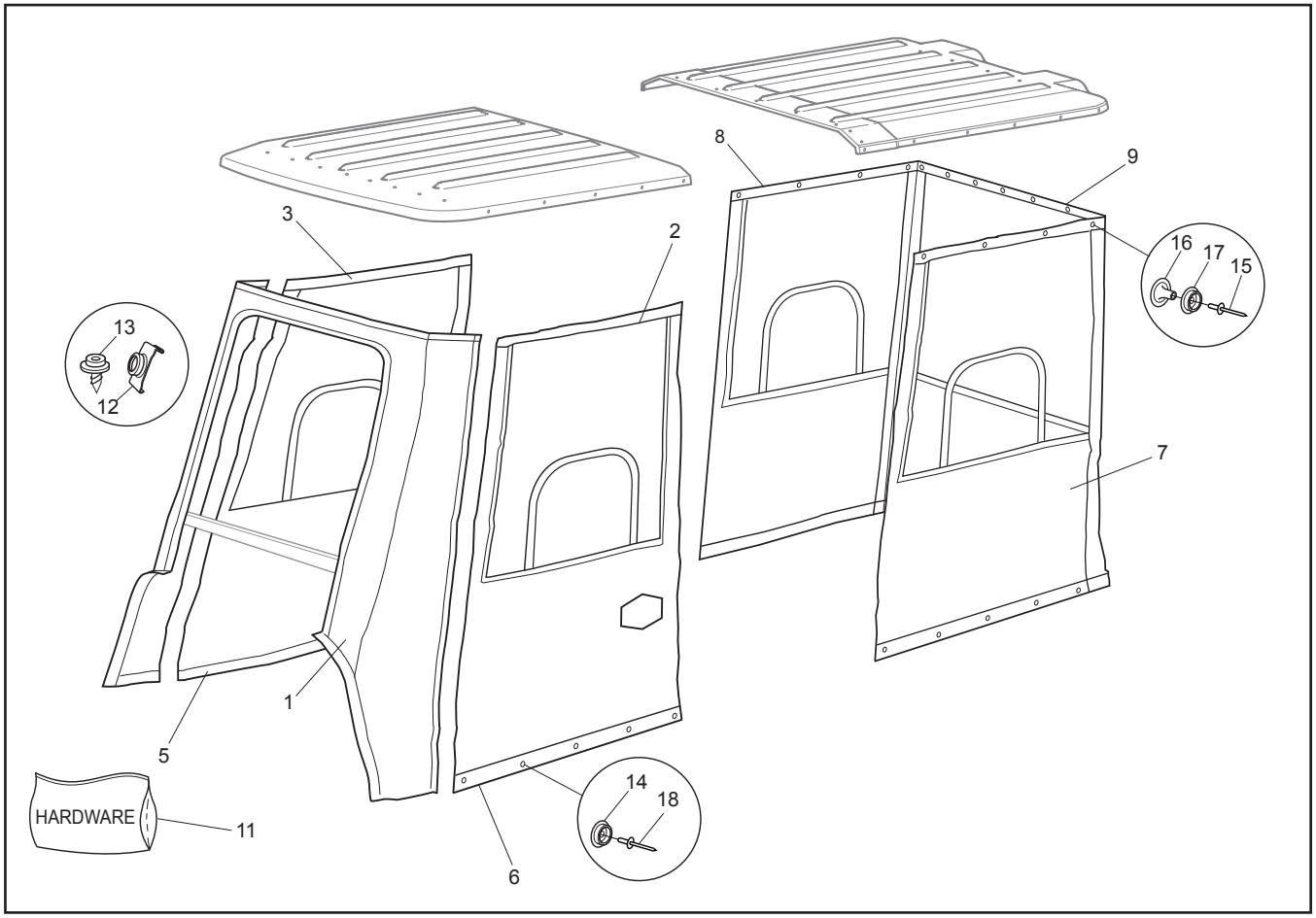

Ref.	Qty.	Part #	Description
1	1	958-206	Molding, Front W/S - Bl Canvas
2	1	958-207	Panel, LH - Bl Canvas
3	1	958-208	Panel, RH - Bl Canvas
4	1	958-212	Pouch, Parts - Bl Canvas
5	1	958-211	Molding, RH Bot - Bl Canvas
6	1	958-210	Molding, LH Bot - Bl Canvas
7	1	958-218	Panel, Rear LH - Bl Canvas
8	1	958-219	Panel, Rear RH - Bl Canvas
9	1	958-220	Panel, RR 4 Person - BL Canvas
11	**1**	**958-216HDW**	**Hardware, 4 Person Canvas Enclosure - XT includes:**
12	13	627-02	Dome Snaps-Clip,Windshield
13	8	627-10	Dome Stud #8 x 3/8" #688
14	49	958-144	Dome, Blank
15	40	120-20	Rivet - 1/8 x 1/4
16	40	958-214	Cap, Dome - Long Post
17	40	958-213	Dome, Blank - Locking
18	41	120-33	Rivet, 1/8 x 1/2 Black

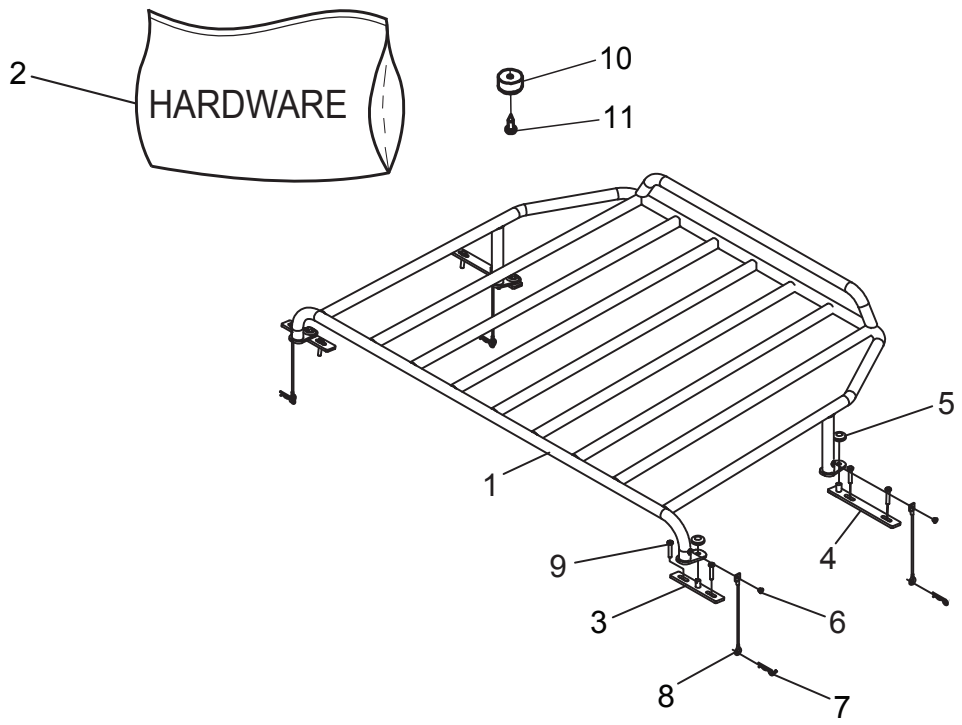

Ref.	Qty.	Part #	Description
1	1	958-223	Wldt, Hood Rack, XT
2	**1**	**958-222HDW**	**Acc. Hood Rack, XT Hardware (incl. Ref. 3-11)**
3	2	958-268	Wldt, Hood Rack Mount - Rear
4	2	958-269	Wldt, Hood Rack Mount - Front
5	4	127-132	Grommet, Rubber - 1/2" ID
6	4	120-31	Rivet, 3/16" x 1/4", Open End
7	4	100-16	Clip, Hitch Pin 1.625 Zn
8	4	104-80	Lanyard, 6" Loop, W/Tab
9	8	112-176	HHCS M6x1,0x30mm Zn
10	2	126-102	Bumper, Recessed Hole
11	2	103-48	T/S Pan Hd Phil #10x5/8 A Blk

958-235 Gun Rack

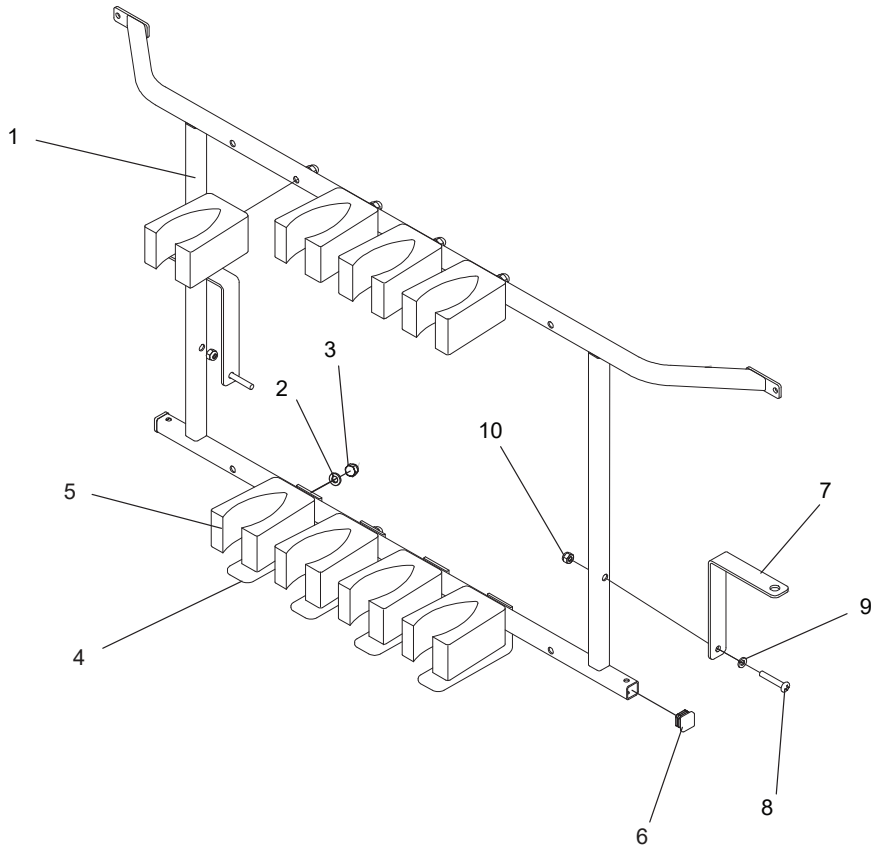

Ref.	Qty.	Part #	Description
1	1	958-238	Wldt, Gun Rack, XT
2	8	108-05	Lockwasher 5/16 Split Ring
3	8	642-75	Nut, Acorn 5/16-18 Blk Zn
4	4	848-206	Butt Plate
5	8	848-207	Sure Grip Head W/Velcro
6	2	867-18	Plug, End 3/4" Tube-Black
7	2	958-237	Brkt, Gun Rack Support, XT
8	2	108-03	Lockwasher 1/4 Split Ring Zn
9	2	103-03	PHMS 1/4-20x1.50 Zn
10	2	117-27	Locknut, Nylon 1/4-20 Zn

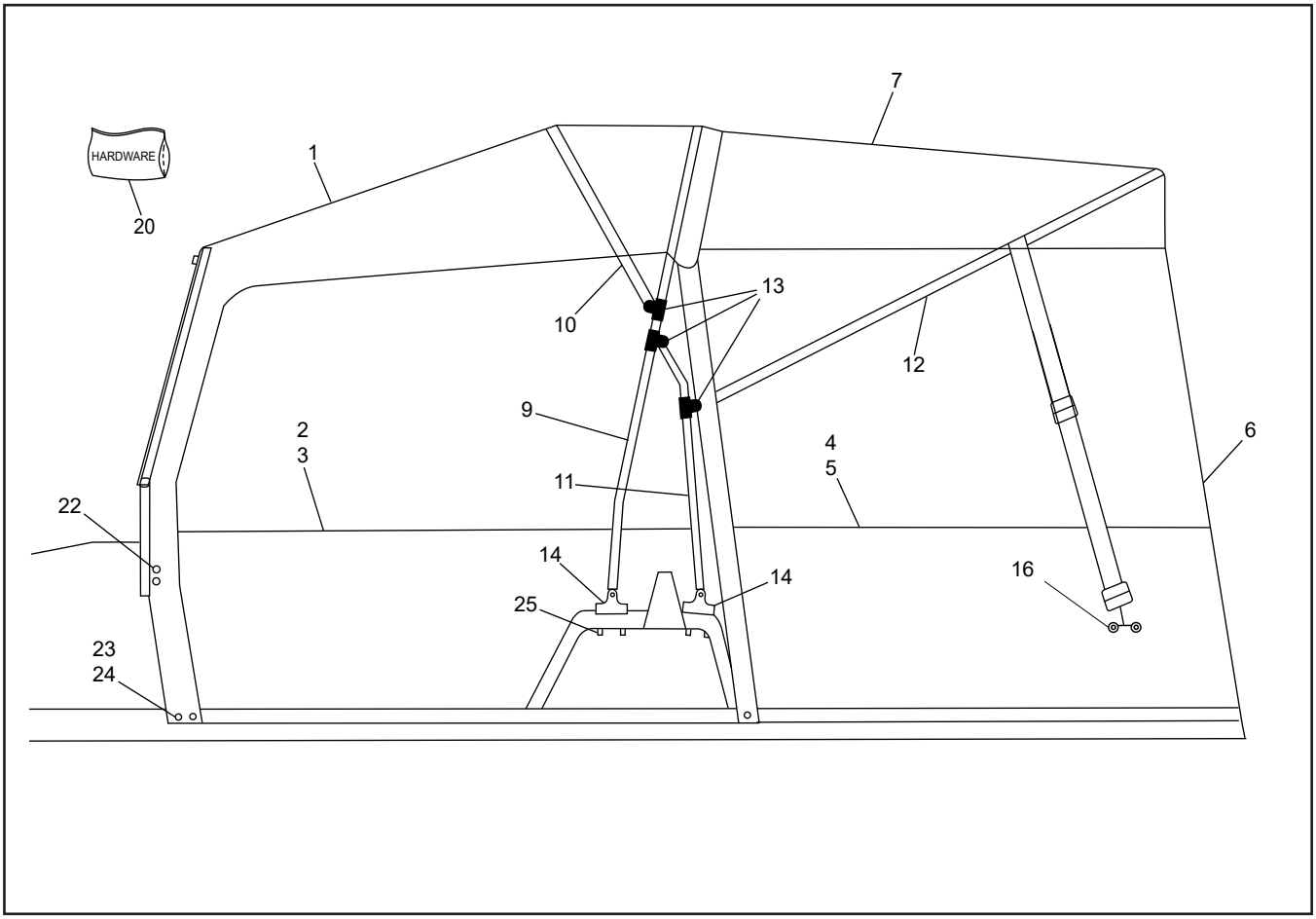

Ref.	Qty.	Part #	Description
1	1	958-339	Panel, Canvas - Front Roof
2	1	958-340	Panel, Canvas - RH FR Door
3	1	958-341	Panel, Canvas - LH FR Door
4	1	958-342	Panel, Canvas - RH RR Door
5	1	958-343	Panel, Canvas - LH RR Door
6	1	958-344	Panel, Canvas - 4P RR Window
7	1	958-345	Panel, Canvas - Rear Roof
8	1	958-346	Boot, Canvas - 4 Person
9	1	958-333	Frame, Main Pole
10	1	958-334	Frame, Front Roof Supt Pole
11	2	958-335	Frame, Main Pole Supt
12	1	958-336	Frame, Rear Roof Supt Pole
13	3	958-187	Jaw Slide W/ Fasteners

Ref.	Qty.	Part #	Description
14	4	958-188	Brkt, Nyl Convex Straight Tapped
15	2	958-189	Brkt, Nyl Convex Curved Drilled
16	2	958-190	Brkt, Stl Flat Straight Tapped
20	**1**	**958-171HDW**	**XT Conv Top - 4 Person Hardware**
21	25	627-02	Dome Snaps Clip, Windshield
22	4	627-10	Dome Stud #8 x 3/8" #688
23	45	958-144	Dome, Blank
24	45	120-20	Rivet - 1/8 x 1/4
25	12	112-102	Screw, Self Drill 12-14 x 3/4"

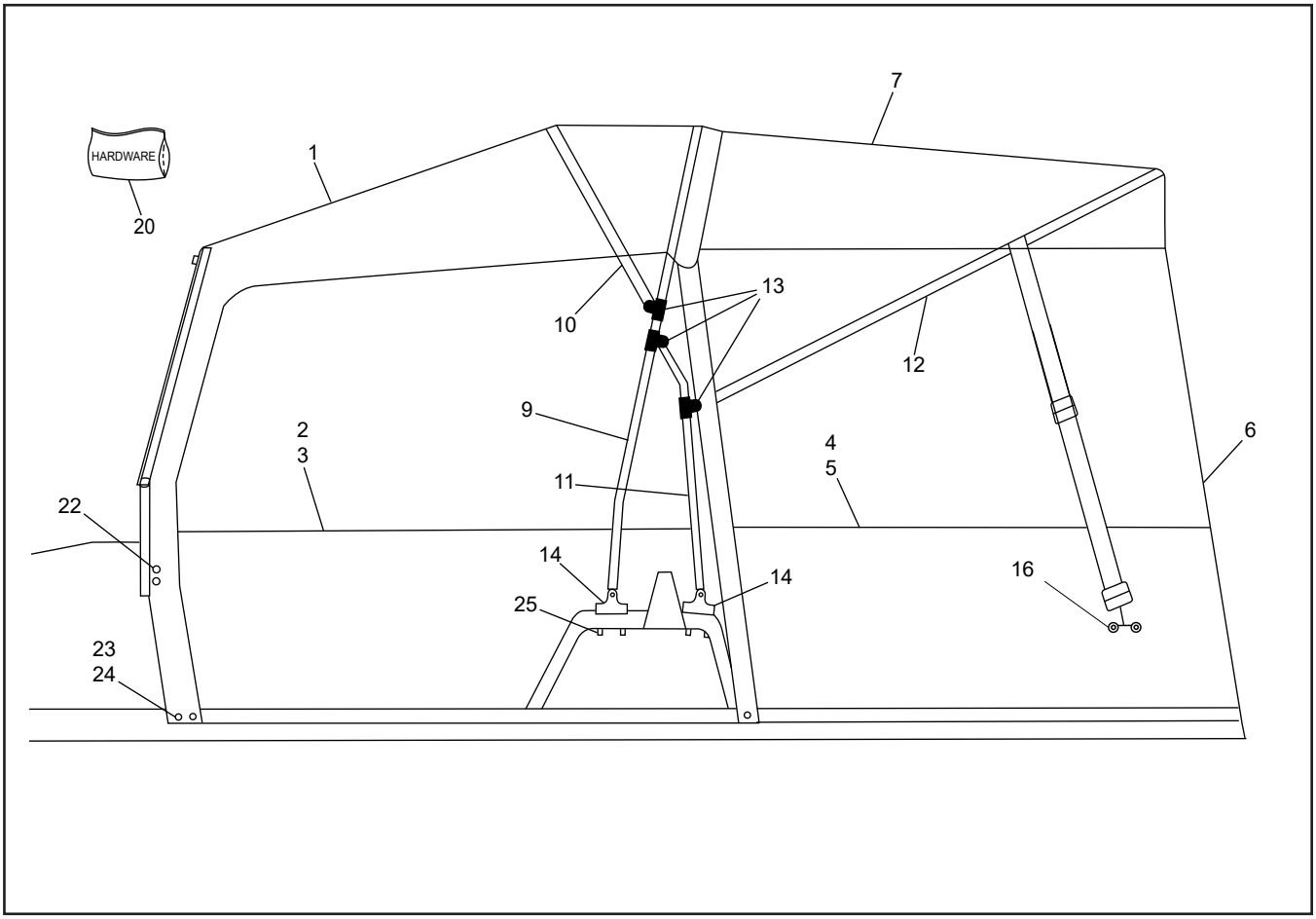

Ref.	Qty.	Part #	Description
1	1	958-325	Panel, Canvas - Front Roof
2	1	958-326	Panel, Canvas - RH FR Door
3	1	958-327	Panel, Canvas - LH FR Door
4	1	958-328	Panel, Canvas - RH RR Door
5	1	958-329	Panel, Canvas - LH RR Door
6	1	958-330	Panel, Canvas - 4P RR Window
7	1	958-331	Panel, Canvas - Rear Roof
8	1	958-332	Boot, Canvas - 4 Person
9	1	958-333	Frame, Main Pole
10	1	958-334	Frame, Front Roof Supt Pole
11	2	958-335	Frame, Main Pole Supt
12	1	958-336	Frame, Rear Roof Supt Pole
13	3	958-187	Jaw Slide W/ Fasteners

Ref.	Qty.	Part #	Description
14	4	958-188	Brkt, Nyl Convex Straight Tapped
15	2	958-189	Brkt, Nyl Convex Curved Drilled
16	2	958-190	Brkt, Stl Flat Straight Tapped
20	**1**	**958-171HDW**	**XT Conv Top - 4 Person Hardware**
21	25	627-02	Dome Snaps Clip, Windshield
22	4	627-10	Dome Stud #8 x 3/8" #688
23	45	958-144	Dome, Blank
24	45	120-20	Rivet - 1/8 x 1/4
25	12	112-102	Screw, Self Drill 12-14 x 3/4"

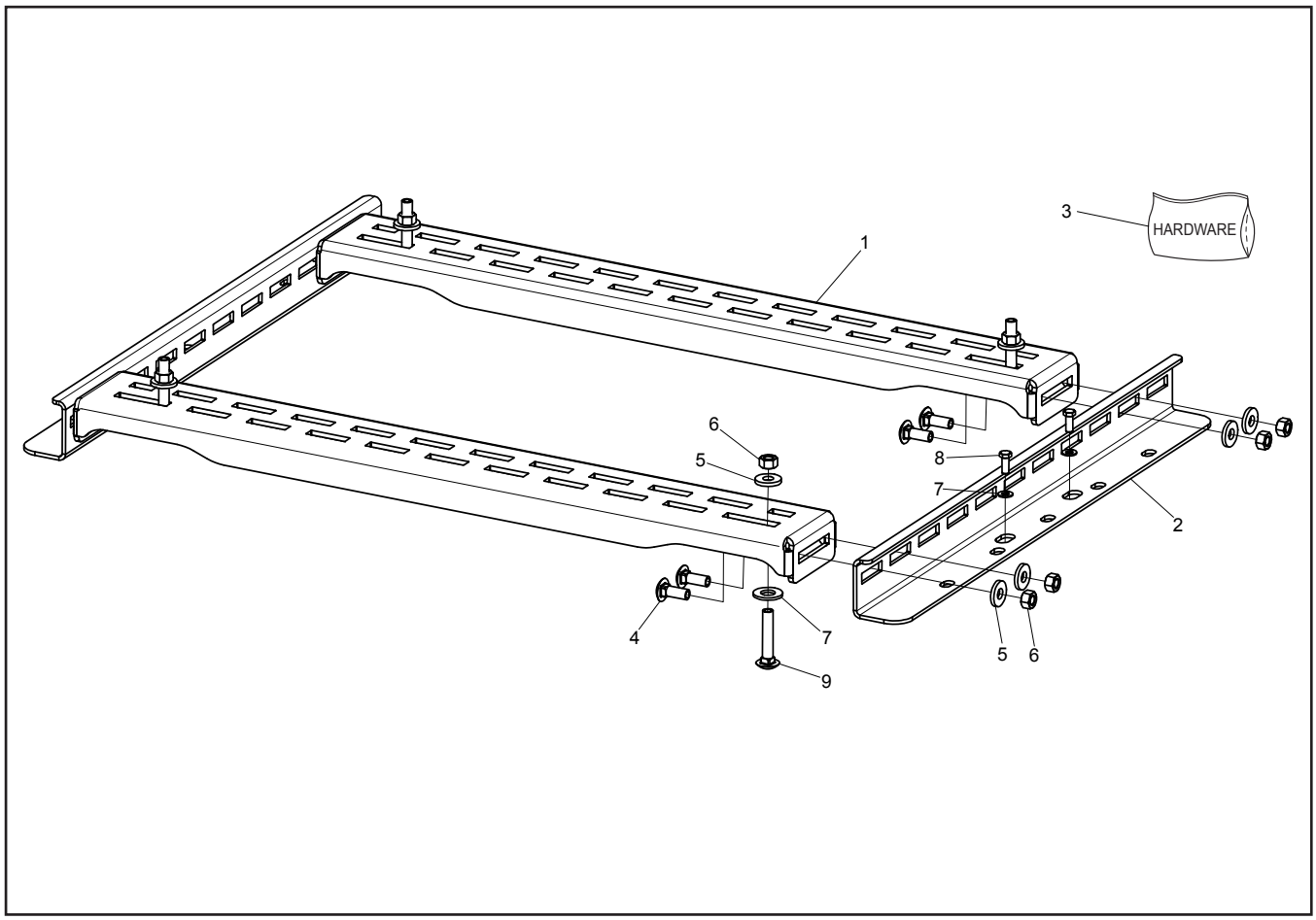

Ref.	Qty.	Part #	Description
1	2	959-05	Wld, X-Mbr - Universal Mount XT
2	2	959-03	Asm, Rail - Universal Mount
3	**1**	**959-01HDW**	**Hardware, Universal Mount-XT**
4	12	103-88	C/Bolt 3/8-16x1.0 Gr5 Zn
5	12	108-47	Washer .39x.94x.13 Zn Di-Chro
6	12	117-15	Nut, Fin Hex 3/8-16 Zn
7	8	108-35	Washer .53x1.06x.09 Zn
8	4	112-189	HHCS 1/2-13x1.25 Gr5 Zn
9	4	112-187	C/Bolt 3/8-16x2.0 Gr5 Zn

10636C Acc, Trailer Cover - 8x8

Fabric:	-Polyester Solution dyed 600D PU coating W/R		Black
	- Foam xolifin 4 lbs Eva 1/8"		
Thread:	-Bonded nylon, TEX 70	3 yarns	Black

1	**Tyvek** (1x)	
2	**Webbing** Material: Polypropylene a) **Width: 25mm (1")** b) **Width: 19mm (3/4")**	Black
3	**Zipper YKK #5** (1x) 1 slider per zipper **STD slider** (1x)	
4	**Side squeeze buckle** UTX Duraflex Material: Acetal **Width: 25mm (1")** a) **Male** (1x) b) **Double female** (1x)	
5	**Stayput fastener** (2x) (Shock cord clip)	Black
6	**Knob** (2x) Material: UV stable glass filled nylon and acetyl	
7	**Torx-Truss M/S M5x25** (2x)	
8	**Hex. Elastic Flanged nut M5** (2x)	
9	**SCREW 8-18 X 5/8"** (8x)	Grey
10	**Bow Socket Nylon** (4x)	Black
11	**Aluminum flat bar 1.5" X 1/8** (2x)	Grey
12	**Ratchet** (1x) Material: Steel zinc plated	Grey
13	**Silk-screen logo** (1x)	

ARGO Products Manufactured by:

Ontario Drive & Gear Limited
220 Bergey Court
New Hamburg, Ontario
Canada N3A 2J5
Phone: (519) 662-2840
Fax: (519) 662-2421
www.argoxtv.com

ODG ***Dedicated to quality and performance***